WER LINEAR ACTUATORS
2nd EDITION

ISSUED JANUARY 1984

SGS-ATES GROUP OF COMPANIES

INTERNATIONAL HEADQUARTERS
SGS-ATES Componenti Elettronici SpA
Via C. Olivetti 2 - 20041 Agrate Brianza - Italy
Tel.: 39 - 65551
Telex: 330131-330141 SGSAGR

BENELUX
SGS-ATES Componenti Elettronici SpA
Benelux Sales Office
B- 1180 Bruxelles
Winston Churchill Avenue, 122
Tel.: 2 - 3432439
Telex: 24149 B

BRAZIL
Sales Office:
05413 Sao Paulo
Av. Henrique Schaumann 286-CJ33
Tel.: 11 - 853-5062
Telex: 37988 UMBR BR

DENMARK
SGS-ATES Scandinavia AB
Sales Office
2730 Herlev
Herlev Torv, 4
Tel.: 2 - 948533
Telex: 35411

EASTERN EUROPE
SGS-ATES Componenti Elettronici SpA
Export Sales Office
20090 Assago (MI)
V.le Milanofiori - Strada 4 - Palazzo A/4/A
Tel.: 2 - 8244131 (10 linee)
Telex: 330131-330141 SGSAGR

FRANCE
Société Générale de Semiconducteurs S.A.
92120 Montrouge
21-23 Rue de la Vanne
Tel.: 1 - 6571133
Telex: 250938F

HONG KONG
SGS-ATES Singapore (Pte) Ltd.
9th Floor, Block N,
Kaiser Estate, Phase III,
11 Hok Yuen St.,
Hung Hom, Kowloon
Tel.: 3-644251/5
Telex: 33906 ESGIE HX

ITALY
SGS-ATES Componenti Elettronici SpA
Direzione Italia e Sud Europa
20090 Assago (MI)
V.le Milanofiori - Strada 4 - Palazzo A/4/A
Tel.: 2 - 8244131 (10 linee)
Telex: 330131-330141 SGSAGR

Sales Offices:
40128 Bologna
Via Corticella, 231
Tel.: 51 - 324486
00199 Roma
Piazza Gondar, 11
Tel.: 6 - 8392848/8312777

SINGAPORE
SGS-ATES Singapore (Pte) Ltd.
Singapore 1231
Lorong 4 & 6 - Toa Payoh
Tel.: 2531411
Telex: ESGIES RS 21412

SWEDEN
SGS-ATES Scandinavia AB
19500 Märsta
Bristagatan 16
Tel.: 760 - 40120
Telex: 042 - 10932

SWITZERLAND
SGS-ATES AG
Swiss Sales Offices
6340 Baar
Oberneuhofstrasse, 2
Tel.: 42 - 315955
Telex: 864915
1218 Grand-Saconnex (Geneve)
Chemin François-Lehmann 22
Tel.: 22 - 986462/3
Telex: 28895

TAIWAN - REPUBLIC OF CHINA
SGS-ATES Singapore (Pte) Ltd.
Taipei
6th floor, Pacific Commercial Bldg.
No. 285 Chung Hsiao E Road
Sec 4
Tel.: 2-7728203
Telex: 10310 ESGIETWN

UNITED KINGDOM
SGS-ATES (United Kingdom) Ltd.
Aylesbury, Bucks
Planar House, Walton Street
Tel.: 296 - 5977
Telex: 041 - 83245

U.S.A.
SGS-Semiconductor Corporation
Phoenix, AZ 85022
1000 East Bell Road
Tel.: (602) 867-6100
Telex: 249976 SGSPH UR

Sales Offices:
Bloomington, MN 55438
6100 Green Valley Drive
Suite 120
Tel.: (612) 835-1347
Dallas, TX 75248
16970 Dallas North Parkway
Suite 401
Tel.: (214) 733-1515
Telex: 203997 SGSDA UR
Hauppauge, NY 11788
330 Motor Parkway
Suite 100
Tel.: (516) 435-1050
Telex: 221275 SGSHA UR
Indianapolis, IN 46241
2346 S. Lynhurst Drive
Suite E-207
Tel.: (317) 241-1116
Telex: 209144 SGSIN UR
Irvine, CA 92714
18271 W. McDurmott Drive
Suite J.
Tel. (714) 863-1222
Telex: 277793
Norcross, GA 30071
3040-D1 Holcomb Bridge Road
Tel.: (404) 446-8686
Telex: 261395 SGSAT UR
Santa Clara, CA 95051
2700 Augustine Drive
Suite 209
Tel.: (408) 727 - 3404
Telex: 278833 SGSSA UR
Schaumburg, IL 60169
600 North Meacham Road
Tel.: (312) 490-1890
Telex: 210159 SGSCH UR
Waltham, MA 02154
240 Bear Hill Road
Tel.: (617) 890-6688
Telex: 200297 SGSWH UR
Woodland Hills, CA 91367
6355 Topanga Canyon Boulevard
Suite 220
Tel.: (213) 716-6600
Telex: 215258 SGSWD UR

WEST GERMANY
SGS-ATES Deutschland Halbleiter
Bauelemente GmbH
8018 Grafing bei München
Haidling, 17
Tel.: 8092-690
Telex: 05 27378
Sales Offices:
3012 Langenhagen
Hubertusstrasse, 7
Tel.: 511 - 772075/7
Telex: 09 23195
8500 Nürnberg 30
Ostendstr., 204
Tel.: 911 - 572977/78/79
Telex: 0626243
8023 Pullach bei München
Seitnerstrasse, 42
Tel.: 89 - 793 0662
Telex: 5215784
7000 Stuttgart 80
Kalifenweg, 45
Tel.: 711 - 713091/2
Telex: 07 255545

TABLE OF CONTENTS

IDENTITY

Late in 1957, SGS was founded around a team of researchers who were already carrying out pioneer work in the field of semiconductors. From that small nucleus, the company has evolved into a Group of Companies, operating on a worldwide basis as a broad range semiconductor producer, with billings well over a quarter billion dollar and employing about 7500 people.

The SGS Group of Companies has now reached a total of 10 subsidiaries, located in France, Germany, Italy, Malta, Malaysia, Singapore, Sweden, Switzerland, United Kingdom and the USA.

To go with its logo, the company has chosen the motto "Technology and Service", underlining the accent given to the development of state-of-the-art technologies and the corporate commitment to offer customers the best quality and service in the industry.

SGS-ATES LOCATIONS - EUROPE

PLUS 117 REPRESENTATIVES AND DISTRIBUTORS

SGS-ATES LOCATIONS NORTH AMERICA

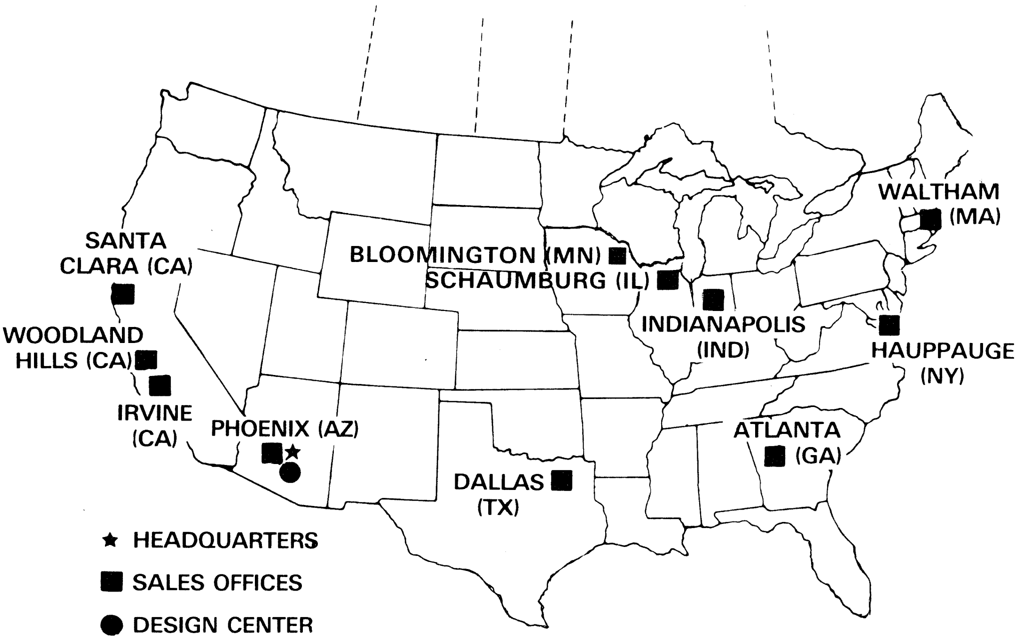

PLUS 136 REPRESENTATIVES AND DISTRIBUTORS

SGS-ATES LOCATIONS - ASIA/PACIFIC

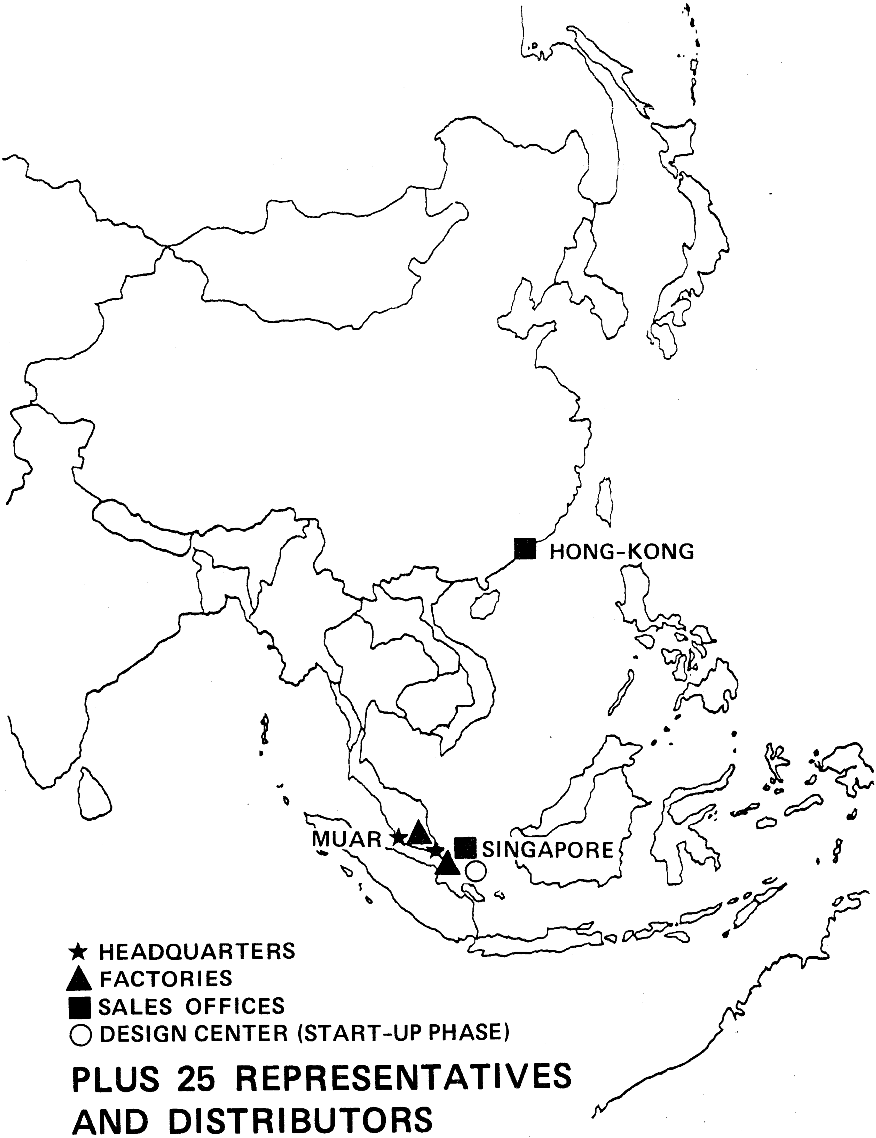

PLUS 25 REPRESENTATIVES AND DISTRIBUTORS

ALPHANUMERICAL INDEX

ALPHANUMERICAL INDEX

POWER LINEAR ACTUATORS

High power linear ICs interface micros to the real world.

Over the last ten years system designers have been aided by tremendous advances in microprocessor technology. But a microprocessor, or microcomputer, is just a small part of most systems. Real products contain displays, solenoids, motors, relays, indicator lamps and other high current loads. Driving these components used to be a job for discrete power devices but today, increasingly, it is the task of high power bipolar ICs.

In this field, too, technology has advanced rapidly and SGS, a specialist in power technology and packages, has set the pace for many years. Today, the SGS Power Linear Actuators Catalog contains a comprehensive range of products that solve virtually all power interfacing problems. Many of these devices are unmatched: the L294 and L295 switchmode solenoid drivers, the L298 dual bridge, the L465A power op amp, the L272 dual power op amp and the L7180/82 darlington arrays. And there are complete interface kits for applications such as DC motor position control (L290, L291 & L292) and bipolar stepper motor driving (L297 + L298). The same power knowhow is now applied to switchmode power supplies, where SGS' L296 Power Switching Regulator IC leaves competitors way behind.

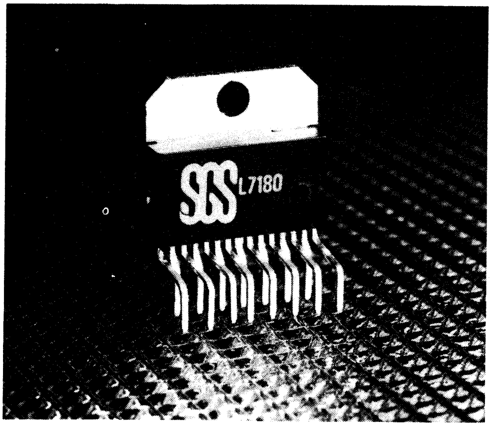

SGS' MULTIWATT plastic package.

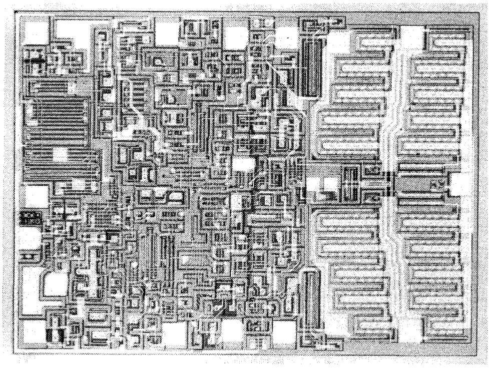

Power LSI — the L292 switchmode driver.

LEADING TECHNOLOGY

To make ICs that handle voltages to 100V, currents to 4A and fast switching times clearly takes something special in the way of technology. SGS has met this challenge with an innovative bipolar process that employs a two-step ion implanted isolation. This process allows the integration of high density control circuits plus fast, high current, high voltage transistors on the same chip.

With the experience gained pioneering audio amplifier chips, SGS has also developed many plastic power packages that have be-

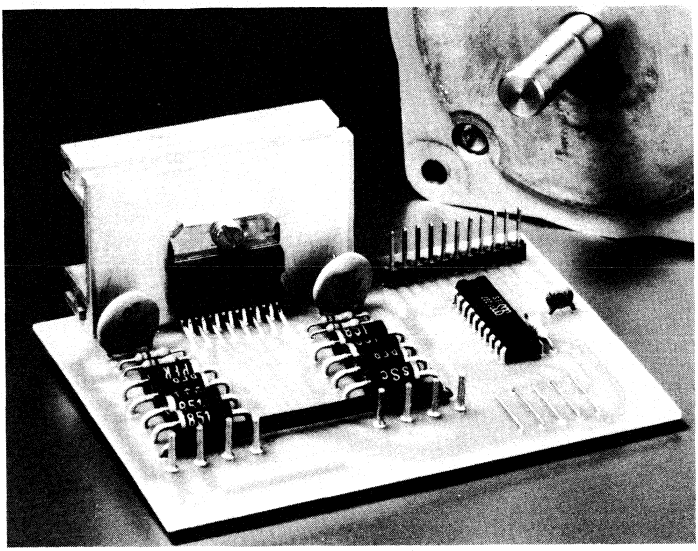

SGS Power linear actuators solve problems like stepper motor driving. An L298 dual bridge and an L297 controller interface directly to a microcomputer and deliver an impressive 200W.

come industry standards — and some that are still unrivalled. The Multiwatt ® 11 and 15-lead packages, for example, with a thermal resistance of only 3°C/W are beginning to replace costly metal packages in some applications.

But SGS technology is no laboratory curiosity. The products described in this book are designed for high volume production and most are already used on a large scale. Chip designs, processes and packages are all proven in the products of some of the most demanding manufacturers in the USA, Europe and Far East. SGS has the experience, knowhow and capacity to ship premium technology products, consistently, in high volumes to tight schedules.

To produce these advanced products, SGS has equipped the bipolar IC production facilities in Italy, France, Singapore, Malta and Malaysia with state of the art production equipment: epitaxial reactors, projection masking, automatic assembly, ion implanters and the latest automatic test equipment.

MORE DESIGN CENTERS

Bringing SGS Technology and Service closer to customers, the company is building local design centers to serve all major markets. Two are already fully operational — at Phoenix, Arizona and Grafing bei Munchen, West Germany — and two more will be ready in 1984: Singapore and Rennes, France. The Bipolar IC Division's central R & D lab near Milan is being expanded, too, to maintain SGS' position of technological leadership in this field.

QUALITY COUNTS, TOO

SGS is committed to quality. Investment in leading-edge production equipment, the reorganisation of production and test areas and the Company's Total Quality Control program demonstrate this committment and all contribute to continuing improvement. Competitive quality in plastic power devices is guaranteed by SGS' unique experience in the field and intensive R & D effort to improve ruggedness.

POWER LINEAR ACTUATORS

SGS Power Linear Actuators are used by leading manufacturers of computer peripherals, office equipment and industrial control equipment throughout the world. Your product, too, can benefit from the cost reduction, space saving and increased reliability of monolithic power circuits.

This book contains datasheets for all SGS Power Linear Actuators plus, for convenience, a selection of voltage regulators useful in industrial applications. Other bipolar circuits are listed in the shortform catalog section at the back of the book.

PRODUCT SELECTOR

Product Selector

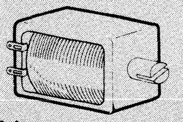 **Solenoids**	L294, L295, L601-4, L702, L3654, L5832, L7150/52, L7180/82, ULN2001A-2004A, ULN2064B-76B, ULN2065B-2077B, ULN2801A-2805A.
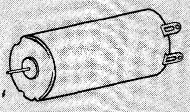 **DC Motors**	L149, L165, L201-4, L272, L272M, L292, L293, L293D, L293E, L298, L465A.
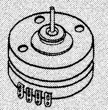 **Stepper Motors**	L293, L293D, L293E, L295, L298, L702, L7150/52, L7180/82, ULN2064B-76B, ULN2065B-77B.
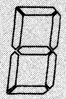 **Displays**	L201-4, L601-4, L702, L3654, L7150/2, L7180/2, ULN2001A-4A, ULN2064B-76B, ULN2065B-77B, ULN2801A-2805A.
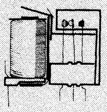 **Relays**	L201-4, L294, L295, L601-4, L702, L5832, L7150/52, L7180/82, ULN2001A-4A, ULN2064B-76B, ULN2065B-77B, ULN2801A-5A.
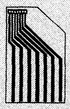 **Thermal Printhead**	L201-4, L601-4, ULN2001A-4A, ULN2801A-2805A, L3654.
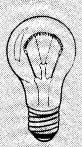 **Lamps**	L201-4, L601-4, L702, ULN2001A-4A, ULN2064B-76B, ULN2065B-77B, ULN2801A-5A.
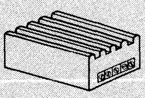 **Power Supplies**	L296, L387, L487, L2600, L4700, L4800.

Bridge Drivers

L293/L293D/L293E

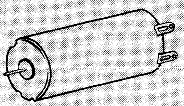

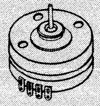

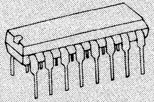

L293/L293D

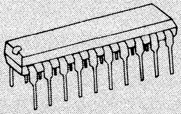

L293E

1A/36V (L293, L293E)
600 mA/36V (L293D)

QUAD PUSH-PULL DRIVERS

- Four push-pull drivers controlled by logic inputs and inhibit inputs.
- Output current 1A per channel (2A peak) for L293, L293E; 600mA continuous, 1-2A peak for L293D.
- Supply voltage to 36V.
- Separate supply input for logic.
- Thermal protection.
- High noise immunity.
- L293D version includes output clamp diodes.
- L293E version has external emitter connections for load current sensing.
- Drive DC motors and bipolar stepper motors.

L298

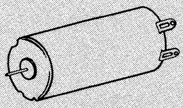

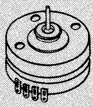

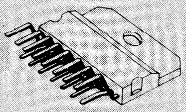

2A/50V

DUAL BRIDGE DRIVER

- Four push-pull drivers; can be used as two bridges.
- Each driver controlled by logic input.
- Each bridge controlled by enable input.
- 2A/50V per bridge.
- External emitter connection for each bridge to connect sensing resistor.
- Separate logic supply.
- Drives DC motors and bipolar stepper motors.

Switchmode Drivers

L292

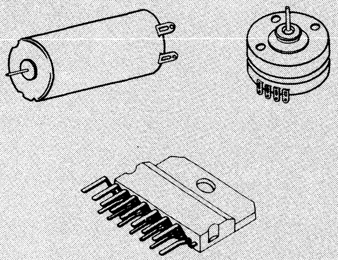

2A/36V

SWITCHMODE DRIVER

- With L290 and L291 forms complete DC motor servopositioning system.
- Delivers motor current proportional to input control voltage.
- Internal PWM chopper regulates load current.
- External loop gain adjustment.
- Bridge output stage.
- Two enable inputs.
- Single supply.
- Delivers up to 2A at 36V to motor.
- Thermal protection.

L294

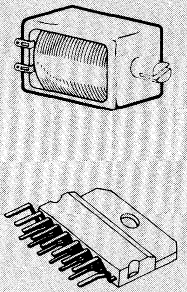

50V/4A

SWITCHMODE SOLENOID DRIVER

- 50V/4A switchmode driver.
- 180W Useful power.
- Low saturation voltage.
- TTL/CMOS/NMOS logic input.
- PWM current regulation (constant ripple).
- Low dissipation/high efficiency.
- Programmable output current.
- Few components.
- Overdrive protection
- Short circuit protection.
- Thermal shutdown.
- Latched diagnostic output.
- Ideal for hammer/needle driving in computer printers.

L295

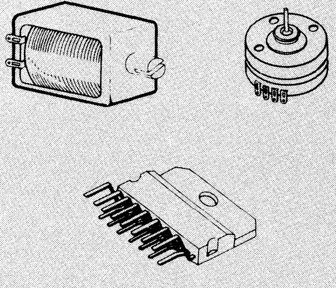

50V/2.5A

DUAL SWITCHMODE DRIVER

- 50V/2.5A per channel.
- 220W Useful power.
- Low saturation voltage.
- TTL/CMOS/NMOS compatible logic input.
- Internal PWM current regulation (constant frequency).
- Cost effective replacement for discrete drivers.
- High efficiency.
- Programmable output current.
- Thermal shutdown.
- Drivers solenoids and unipolar stepper motors (2 x L295).

Linear Drivers

L149

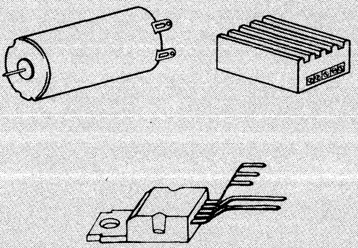

4A/40V

4A LINEAR DRIVER

- Output current up to 4A.
- Push-pull output.
- High current gain (typ. 10 000).
- Operates at up to 40V.
- High slew rate (30V/μs)
- Inhibit input.
- Short circuit protection.
- Ideal for use as current booster in servo loops or to interface logic to high current loads.

L165/L465A

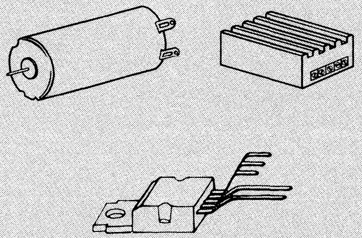

3.5A/36V

POWER OP AMPS

- Output current to 3A (L165), 3.5A (L465A).
- 36V Supply.
- Slew rate 8V/μs (L165), 14V/μs (L465A).
- Ground compatible inputs.
- Short circuit protection.
- SOA protection.
- Thermal protection.
- Ideal for DC motors, power supplies, servos etc.

L272/L272M

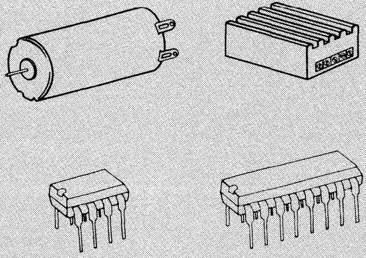

1.5A/28V

DUAL POWER OP AMPS

- Dual power op amps for DC motor driving & power supply applications.
- Output current to 1.5A.
- Large common-mode and differential mode ranges.
- Ground compatible inputs.
- Low saturation.
- Dissipates up to 5W (Powerdip L272), 1.5W (Minidip L272M).
- Thermal shutdown.
- Ideal for applications such as videocassette recorders.

Darlington Arrays

L201, L202, L203, L204

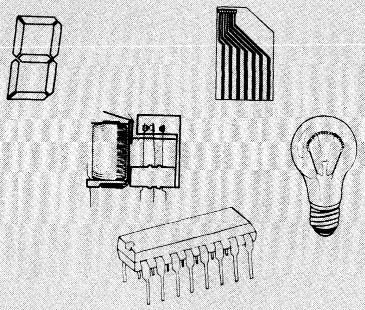

500 mA/50V

DARLINGTON ARRAYS

- Seven NPN darlington with common emitter and open collectors.
- 500 mA each/600 mA peak; can be paralleled for higher current.
- High voltage capability $V_{CE(sus)} = 36V$.
- Versions for DTL, TTL, PMOS and CMOS logic input.
- 16-lead copper frame DIP package.
- Integral suppression diodes for inductive loads.
- Convenient input-opposite-output pin configuration.

L601, L602, L603, L604

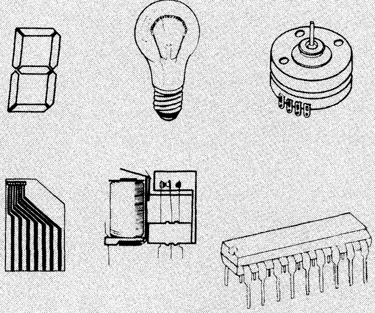

400 mA/90V

DARLINGTON ARRAYS

- Eight NPN darlingtons.
- 400 mA each/500 mA peak; can be paralleled for higher current.
- High voltage capability $V_{CE(sus)} = 70V$
- Versions for DTL, TTL, CMOS and PMOS logic inputs.
- 18-Lead copper frame DIP package.
- Integral suppression diodes for inductive loads.
- Convenient input-opposite-output pin configuration.

L702

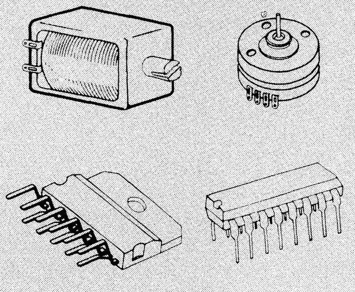

2A/90V

DARLINGTON ARRAY

- Four NPN darlingtons, common emitters, open collectors.
- High current gain.
- 2A Current capability.
- Sustaining voltage to 70V, V_{CEX} to 90V.
- Each darlington has input resistor for direct connection to logic.

ULN2001A/2002A/2003A/2004A

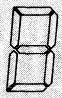

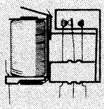

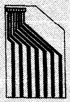

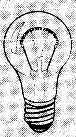

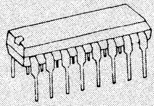

500 mA/50V

DARLINGTON ARRAYS

- Seven NPN darlingtons with common emitters and open collectors.
- 500 mA each/600 mA peak; can be paralleled for higher current.
- High voltage capability $V_{CE\,(sus)} = 36V$
- Versions for DTL, TTL, PMOS logic inputs.
- 16-lead copper frame DIP package.
- Integral suppression diodes for inductive loads.
- Convenient input-opposite-output pin configuration.

ULN2064B/2066B/2068B
ULN2070B/2074B/2076B

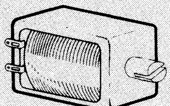

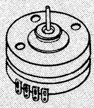

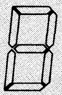

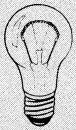

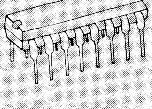

1.5A/50V

50V QUAD DARLINGTON SWITCHES

- Four high voltage, high current darlington switches.
- Integral suppression diodes (ULN2064B, ULN2066B, ULN2068B, ULN2070B).
- Fully isolated darlingtons (ULN2074B, ULN2076B).
- Output voltage up to 50V.
- Sustaining voltage to 35V.
- Output current to 1.5A.
- Logic inputs compatible with 5V logic families (ULN2064B, ULN2068B).
- Logic inputs compatible with 6-15V CMOS/MOS logic (ULN2066B, ULN2070B, ULN2076B).
- Predriver stage (ULN2068B, ULN2070B).
- Powerdip package.
- Designed for high current driving applications, eg. displays, lamps motors & solenoids.

Darlington Arrays

ULN2065B/2067B/2069B
ULN2071B/2075B/2077B

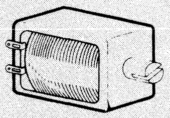

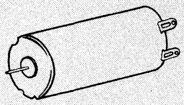

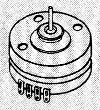

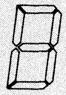

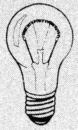

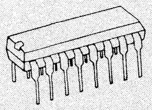

1.5A/80V

80V QUAD DARLINGTON SWITCHES

- Four high-voltage, high-current darlington switches.
- Integral suppression diodes (ULN2065B, 67B, 69B, 71B).
- Fully isolated darlingtons (ULN2075B, 77B).
- Output voltage to 80V.
- Sustaining voltage to 50V.
- Output current to 1.5A.
- Logic inputs compatible with 5V logic families (ULN2065B, 69B, 75B).
- Logic inputs for 6-15V CMOS/PMOS (ULN2067B, 71B).
- Predriver stage (ULN2069B, 71B).
- Powerdip package.

ULN2801A/ULN2802A/ULN2803A
ULN2804A/ULN2805A

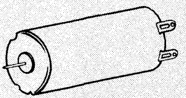

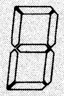

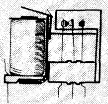

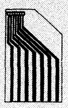

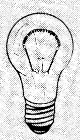

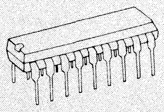

500 mA/50V

DARLINGTON ARRAYS

- Eight high-voltage, high-current darlington arrays.
- Output voltage to 50V.
- Output current to 500 mA/channel.
- Integral suppresion diodes.
- Versions for TTL, LSTTL, CMOS, 15V CMOS, PMOS, high speed CMOS, DTL and high output TTL logic.
- Convenient input-opposite-output pin configuration.
- 18-lead copper frame DIP package.

Darlington Arrays

L7150/L7152

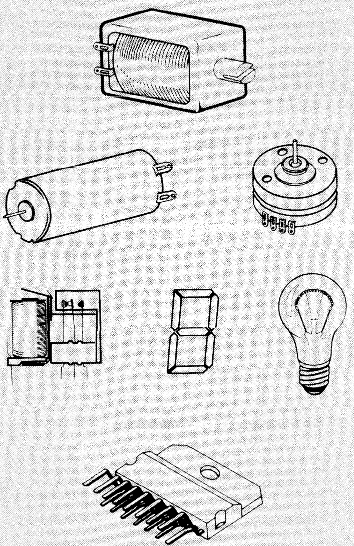

1.5A/50V

QUAD DARLINGTON SWITCHES

- Four isolated darlington switches.
- Output voltage to 50V.
- Output current 1.5A per channel.
- Integral suppression diodes for inductive loads.
- Inputs compatible with DTL, TTL, LSTTL & 5V CMOS (L7150) plus 6-15 CMO/PMOS (L7152).

L7180/L7182

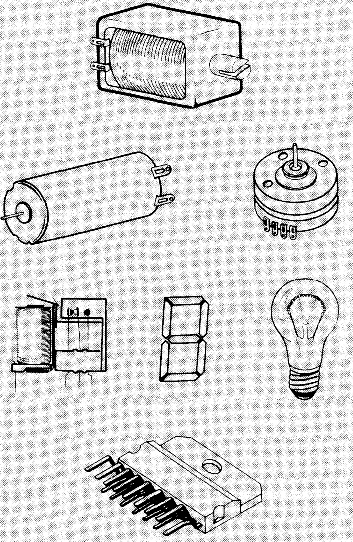

1.5A/80V

QUAD DARLINGTON SWITCHES

- Four isolated darlington switches.
- Output voltage to 80V.
- Output current 1.5A per channel.
- $V_{CE(sus)}$ 50V min.
- Integral suppression diodes for inductive load.
- Inputs compatible with DTL, TTL, LSTTL & 5V CMOS (L7180) plus 6-16V CMOS/PMOS (L7182).

Special Functions

L290

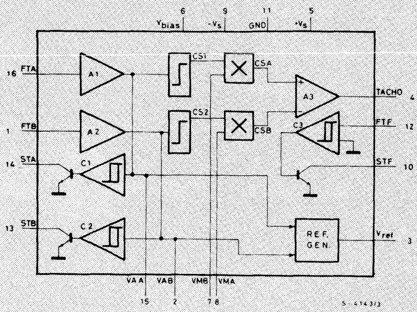

TACHOMETER CONVERTER

- Generates tacho voltage and position signal from optical encoder signals.
- Generates reference voltage from encoder signals to compensate for ageing, temperature variations etc.
- Squares encoder signals for microprocessors.
- Easy-to-filter fourth harmonic ripple on tacho voltage.
- Tacho voltage generation circuit ensures fast response.
- With L291 and L292 forms 3-chip DC motor servopositioning system.

L291

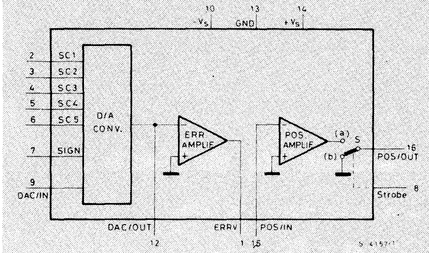

D/A CONVERTER AND POSITION AMPLIFIER

- Contains 5-bit D/A converter, error amplifier and position amplifier.
- Logic inputs control D/A converter polarity and switch position amplifier in/out.
- D/A converter has external reference input for self compensation with L290 tacho converter.
- With L290 and L292 forms 3-chip DC motor servopositioning system.

L297

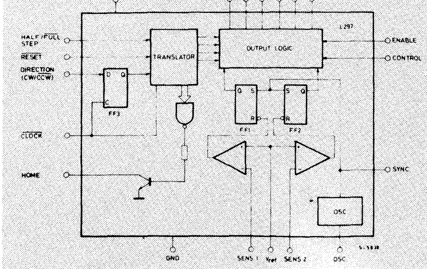

STEPPER MOTOR CONTROLLER

- Contains translator plus PWM choppers to regulate load current.
- Generates normal wave drive and half step sequences.
- Winding current programmable.
- Simple step clock, direction and mode inputs unburden control microcomputer.
- Reset input/home output.
- With L293E or L298 driver forms complete two chip bipolar step motor interface.
- With quad darlington arrays drives unipolar step motors.

L3654

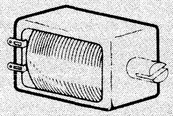

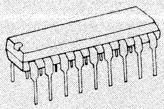

250 mA/45V

PRINTER SOLENOID DRIVER

- 10 open-collector outputs
- Serial data input.
- 250 mA each channel.
- Outputs clamped internally at 50V for inductive loads.
- Serial data output allows addition of additional devices.
- Separate logic supply.
- Output enable input.
- Useful in thermal printers, printing calculators etc.

L5832

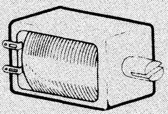

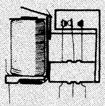

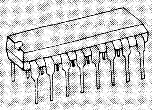

SOLENOID CONTROLLER

- With one or two external darlingtons drives solenoids.
- PWM regulation of load current.
- Single or dual level current control.
- High efficiency.
- Wide supply range (up to 46V).
- TTL-compatible logic inputs.
- Output waveshape programmed by external components.
- Thermal protection.

Systems

L290 Tacho Converter
L291 D/A Converter
L292 Switchmode Driver

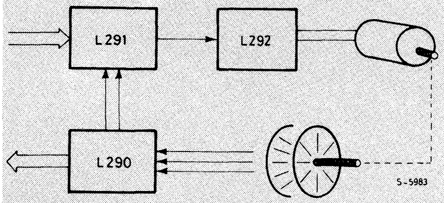

3-CHIP DC MOTOR POSITIONING SYSTEM

- Complete DC motor servopositioning system.
- Connects directly to microcomputer.
- Velocity and position feedback modes for fast, accurate positioning.
- Self-compensating reference for long term stability.
- Works with standard optical encoders.
- Delivers 2A at 36V to motor for fast acceleration.
- Characteristics programmable by external resistors.
- Simple implementation of power-on inhibit.

L297 Stepper Motor Controller
L298 Dual Bridge Driver

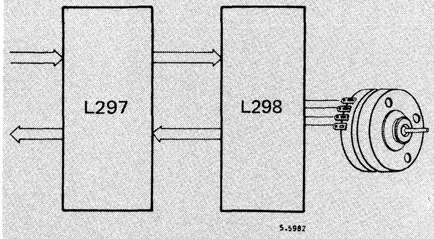

BIPOLAR STEP MOTOR DRIVING KIT

- Complete microprocessor-to-bipolar step motor interface.
- Drives bipolar step motors with winding currents to 2A/50V.
- Supports normal, wave drive and half step modes.
- PWM regulation of winding current.
- Simple step clock, direction and mode inputs reduce burden on micro.
- Few components required.
- Chopper rates can be synchronised in multiple configuration.
- L297 Also drive unipolar motors with quad darlington arrays.

Regulators

L296

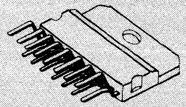

4A/5.1-40V

POWER SWITCHING REGULATOR

- . Monolithic power switching regulator.
- 4A Output current.
- Adjustable 5.1-40V output.
- Programmable current limiting.
- Soft start.
- Reset output for microprocessors.
- Voltage sense/gate drive circuit for crowbar protection with external SCR.
- Operates efficiently at switching frequencies to 200 kHz.
- Few external components.
- Thermal protection.

L387

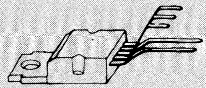

500 mA/5V

VERY LOW DROP 5V REGULATOR WITH RESET

- 500 mA output current.
- Very low voltage drop (0.6V at 500 mA).
- Reset output for microprocessors.
- Short circuit protection.
- Thermal shutdown.
- Designed for consumer/industrial applications where low consumption and low drop are important.

L487

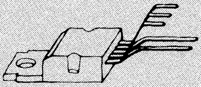

500 mA/5V

VERY LOW DROP 5V REGULATOR WITH RESET

- 500 mA output current.
- Very low voltage drop (0.6V at 500 mA).
- ± 80V transient protection.
- Reverse polarity protection.
- Reset output for microprocessors.
- Thermal shutdown.
- Short circuit protection.
- Designed for industrial/automotive applications.

Regulators

L2600 series

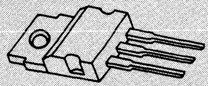

500 mA/5, 8.5, 10V

VOLTAGE REGULATORS FOR INDUSTRIAL AND AUTOMOTIVE

- Output current to 500 mA.
- Output voltages 5V, 8.5V, 10V.
- ± 100V load dump protection.
- Reverse polarity protection.
- Short circuit protection.
- Thermal shutdown.

L4700 series

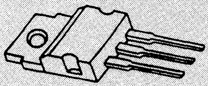

500 mA/5, 8.5, 10V

VERY LOW DROP VOLTAGE REGULATORS

- Output current to 500 mA.
- Input/output drop 0.6V typ.
- 80V load dump protection.
- -80V transient protection.
- Reverse polarity protection.
- Thermal shutdown.
- Designed for industrial/automotive applications.

L4800 series

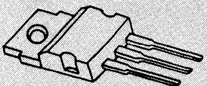

400 mA/5, 8.5, 10V

VERY LOW DROP VOLTAGE REGULATORS

- Very low input/output drop (typ. 0.4V).
- 400 mA output current.
- Low quiescent current.
- 60V Load dump protection.
- -60V transient protection.
- Reverse polarity protection.
- Foldback current limiting.
- Thermal shutdown.
- Ideal for Industrial/consumer applications where low consumption is important.

APPLICATION GUIDE

A DESIGNER'S GUIDE TO THE L290/L291/L292 DC MOTOR SPEED/POSITION CONTROL SYSTEM

The L290, L291 and L292 together form a complete microprocessor-controlled DC motor servopositioning system that is both fast and accurate. This design guide presents a description of the system,detailed function descriptions of each device and application information.

The L290, L291 and L292 are primarily intended for use with a DC motor and optical encoder in the configuration shown schematically in figure 1. This system is controlled by a microprocessor, or microcomputer, which determines the optimum speed profile for each movement and passes appropriate commands to the L291, which contains the system's D/A converter and error amplifiers. The L291 generates a voltage control signal to drive the L292 switchmode driver which powers the motor. An optical encoder on the motor shaft provides signals which are processed by the L290 tachometer converter to produce tacho voltage feedback and position feedback signals for the L291 plus distance/direction feedback signals for the control micro.

Fig. 1 - The L290, L291 and L292 form a complete DC motor servopositioning system that connects directly to microcomputer chips.

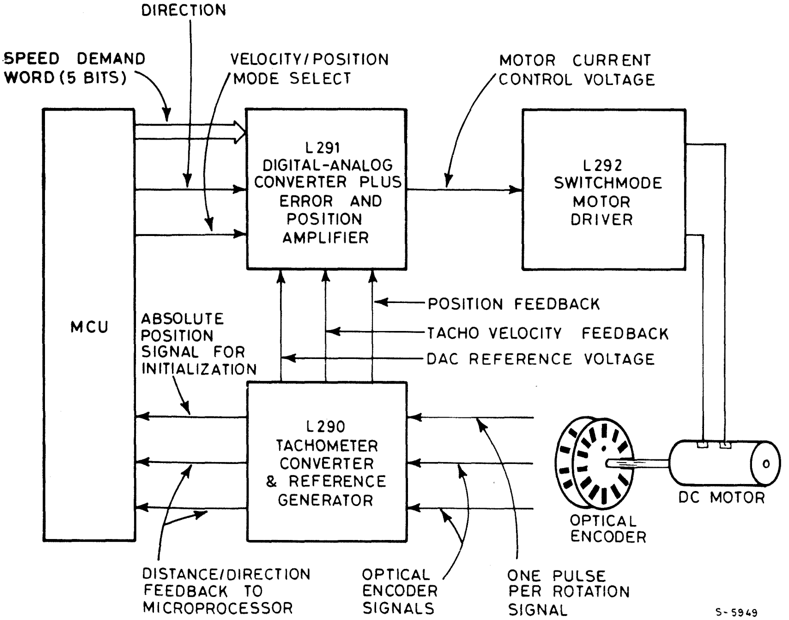

The system operates in two modes to achieve high speed and accuracy: closed loop speed control and closed loop position control. The combination of these two modes allows the system to travel rapidly towards the target position then stop precisely without ringing.

Initially the system operates in speed control mode. A movement begins when the microcomputer applies a speed demand word to the L291, typically calling for maximum speed. At this instant the motor speed is zero so there is no tacho feedback and the system operates effectively in open loop mode (see figure 2). In this condition a high current peak — up to 2A — accelerates the motor rapidly to ensure a fast start.

As the motor accelerates the tacho voltage rises and the system operates in closed loop speed mode, moving rapidly forwards the target position. The microcomputer, which is monitoring the optical encoder signals (squared by the L290), reduces the speed demand word gradually when the target position is close. Each time the speed demand word is reduced the motor is braked by the speed control loop.

Finally, when the speed code is zero and the target position extremely close, the micro commands the system to switch to position mode. The motor then stops rapidly at the desired position and is held in an electronic detent.

Fig. 2 - The system operates in two modes to achieve high speed and accurary. Tachometer feedback regulates the speed during a run and brakes the motor towards the end. Position feedback allows a precise final positioning.

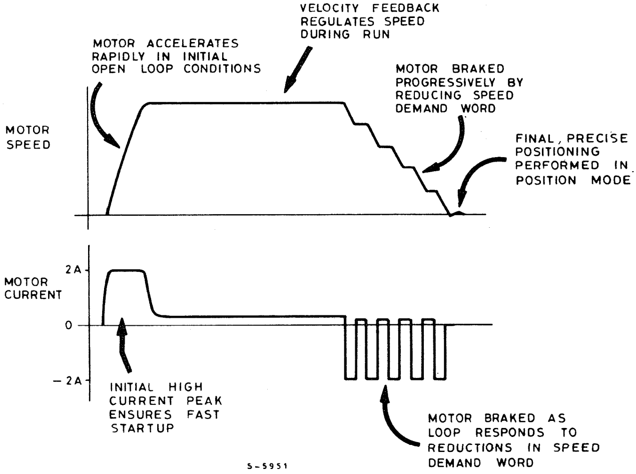

OPTICAL ENCODER

The optical encoder used in this system is shown schematically in figure 3. It consists of a rotating slotted disk and a fixed partial disk, also slotted.

Light sources and sensors are mounted so that the encoder generates two quasi-sinusoidal signals with a phase difference of ± 90°. These signals are referred to as FTA and FTB. The frequency of these signals indicates the speed of rotation and the relative phase difference indicates the direction of rotation. An example of this type is the Sensor Technology STRE 1601, which has 200 tracks. Similar types are available from a number of manufactures including Sharp and Eleprint.

This encoder generates a third signal, FTF, which consists of one pulse per rotation. FTF is used to find the absolute position at initialization.

Fig. 3 - The system operates with an optical encoder of the type shown schematically here. It generates two signals 90° out of phase plus a one pulse-per-rotation signal.

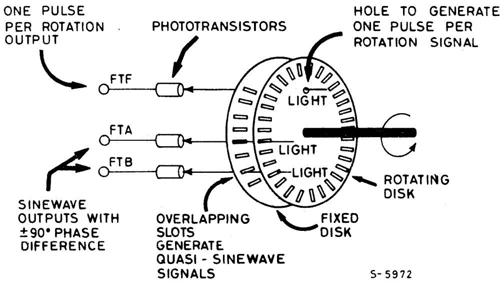

THE L290 TACHOMETER CONVERTER

The L290 tachometer converter processes the three optical encoder signals FTA, FTB, FTF to generate a tachometer voltage, a position signal and feedback signals for the microprocessor. It also generates a reference voltage for the system's D/A converter.

Analytically, the tacho generation function can be expressed as:

$$\text{TACHO} = \frac{dV_{AB}}{dt} \cdot \frac{FTA}{|FTA|} - \frac{dV_{AA}}{dt} \cdot \frac{FTB}{|FTB|}$$

In the L290 (block diagram, figure 4) this function is implemented by amplifying FTA and FTB in A1 and A2 to produce V_{AA} and V_{AB}. V_{AA} and V_{AB} are differentiated by external RC networks to give the signals V_{MA} and V_{MB} which are phase shifted and proportional in amplitude to the speed of rotation. V_{MA} and V_{MB} are passed to multipliers, the second inputs of which are the sign of the **other** signal before differentiation.

Fig. 4 - The L290 processes the encoder signals, generating a tacho voltage and position signal for the L291 plus feedback signals for the microprocessor. Additionally, it generates a refence voltage for the L291's D/A converter.

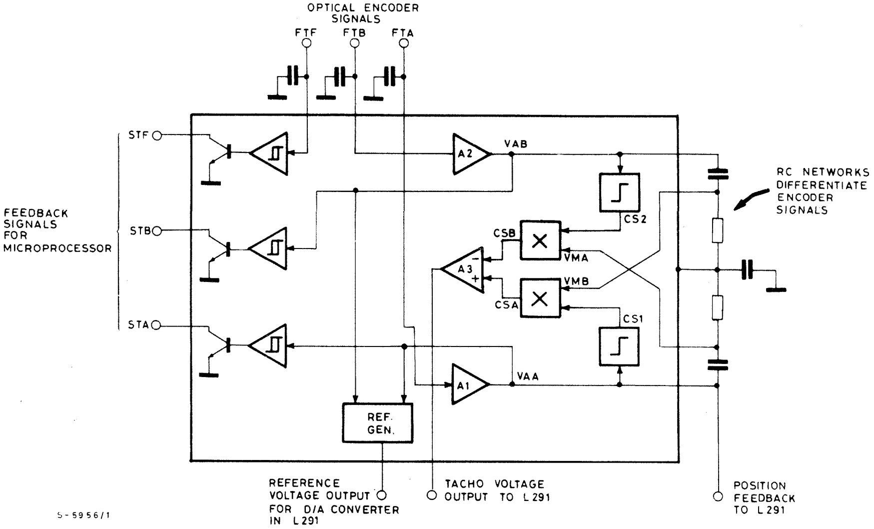

The sign $\left(\frac{FTA}{|FTA|}\right.$ or $\left.\frac{FTB}{|FTB|}\right)$ is provided by the comparators CS1 and CS2. Finally, the multiplier outputs are summed by A3 to give the tacho signal. Figure 5 shows the waveforms for this process.

This seemingly complex approach has three important advantages. First, since the peaks and nulls of CSA and CSB tend to cancel out, the ripple is very small. Secondly, the ripple frequency is the fourth harmonic of the fundamental so it can be filtered easily without limiting the bandwidth of the speed loop. Finally, it is possible to acquire tacho information much more rapidly, giving a good response time and transient response.

Feedback signals for the microprocessor, STA, STB and STF, are generated by squaring FTA, FTB and FTF. STA and STB are used by the micro to keep track of position and STF is used at initialization to find the absolute position.

Position feedback for the L291 is obtained simply from the output of A1.

Fig. 5 - These waveforms illustrate the generation of the tacho voltage in the L290. Note that the ripple is fourth harmonic. The amplitude of TACHO is proportional to the speed of rotation.

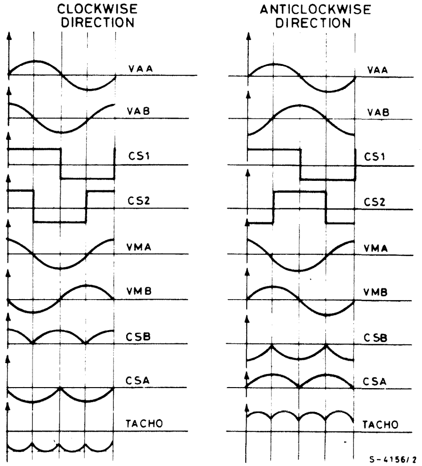

The L290 also generates a reference voltage for the L291's D/A converter. This reference is derived from V_{AA} and V_{AB} with the function:

$$V_{ref} \equiv |V_{AA}| + |V_{AB}|$$

Since the tacho voltage is also derived from V_{AA} and V_{AB} it follows that the system is self compensating and can tolerate variations in input levels, temperature changes and component ageing with no deterioration of performance.

THE L291 D/A CONVERTER AND AMPLIFIERS

The L291, shown in figure 6, links the system to the micro and contains the system's main error amplifier plus a position amplifier which allows independent adjustment of the characteristics of the position loop.

It contains a five bit D/A converter with switchable polarity that takes its reference from the L290. The polarity, which controls the motor direction, is controlled by the micro using the SIGN input.

The main error amplifier sums the D/A converter output and the tacho signal to produce the motor drive signal ERRV. The position amplifier is provided to allow independent adjustment of the position loop gain characteristics and is switched in/out of circuit to select the mode. The final position mode is actually 'speed plus position' but since the tacho voltage is almost zero when position mode is selected the effect of the speed loop is negligible.

Fig. 6 - The L291 links the system to the microprocessor. It contains the system DA converter, main error amplifier and position amplifier.

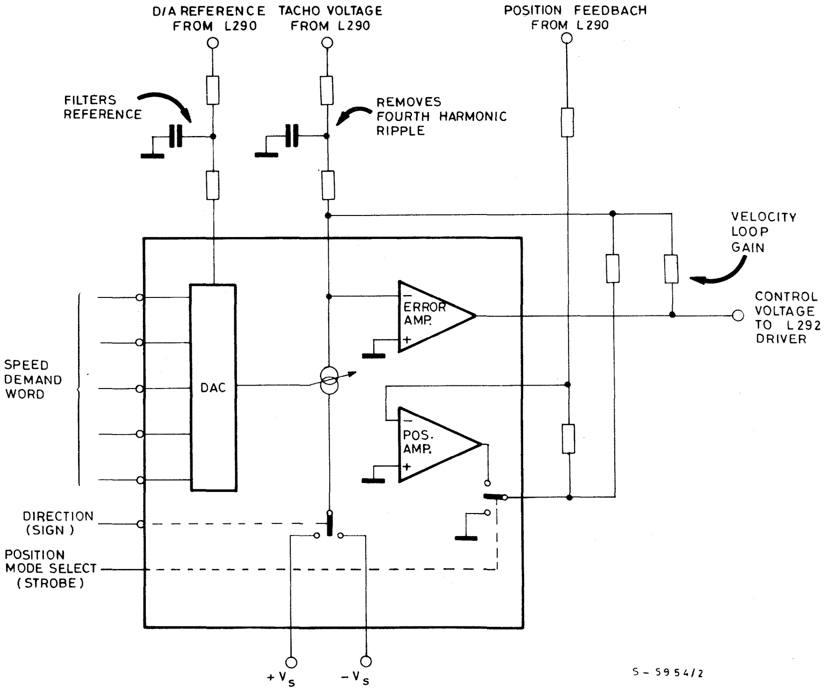

THE L292 SWITCHMODE MOTOR DRIVER

The L292 can be considered as a power transconductance amplifier — it delivers a motor current proportional to the control voltage (ERRV) from the L291. It drives the motor efficiently in switchmode and incorporates an internal current feedback loop to ensure that the motor current is always proportional to the input control signal.

The input control signal (see block diagram, figure 7) is first shifted to produce a unipolar signal (the L292 has a single supply) and passed to the error amplifier where it is summed with the current feedback signal. The resulting error signal is used to modulate the switching pulses that drive the output stage.

External sense resistors monitor the load current, feeding back motor current information to the error amplifier via the current sensing amplifier.

Fig. 7 – The L292 switchmode driver receives a control voltage from the L291 and delivers a switchmode regulated current to the motor.

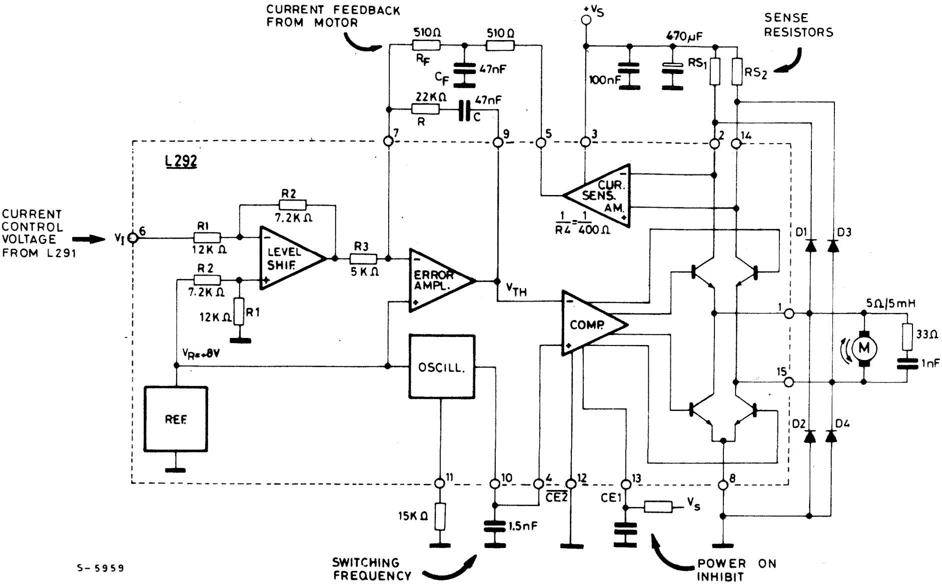

The L292 incorporates its own voltage reference and all the functions required for closed loop current control of the motor. Further, it features two enable inputs, one of which is useful to implement a power on inhibit function.

The L292's output stage is a bridge configuration capable of handling up to 2A at 36V. A full bridge stage was chosen because it allows a supply voltage to the motor effectively twice the voltage allowed if a half bridge is used. A single supply was chosen to avoid problems associated with pump-back energy.

In a double supply configuration, such as the example in figure 8a, current flows for most of the time through D1 and Q1. A certain amount of power is thus taken from one supply and pumped back into the other. Capacitor C1 is charged and its voltage can rise excessively, risking damage to the associated electronics.

By contrast, in a single supply configuration like figure 8b the single supply capacitor participates in both the conduction and recirculation phases. The average current is such that power is always taken from the supply and the problem of an uncontrolled increase in capacitor voltage does not arise.

Fig. 8 – A simple push pull output (a) needs a split supply and the device can be damaged by the voltage built up on C1. The L292 has a bridge output to avoid these problems. Only one supply is needed and the voltage across the single capacitor never rises excessively. Moreover, the motor can be supplied with a voltage up to twice the voltage allowed with a half bridge.

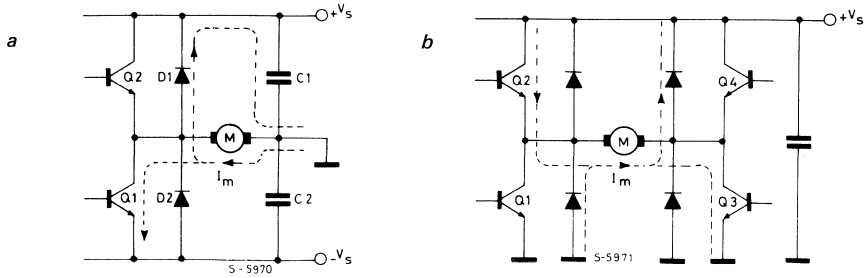

A problem associated with the system used in the L292 is the danger of simultaneous conduction in both legs of the output bridge which could destroy the device. To overcome this problem the comparator which drives the final stage consists of two separate comparators (figure 9). Both receive the same V_t, the triangular wave from the oscillator, signal but on opposite inputs.

The other two inputs are driven by V_{TH}, the error amplifier output, shifted by plus or minus $R_T I'$. This voltage shift, when compared with V_t, results in a delay in switching from one comparator to the other.

Fig. 9 - The L292's final comparator actually consists of two comparators. This configuration introduces a delay to prevent simultaneous conduction of two legs.

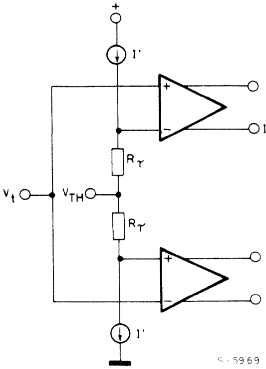

Consequently there will always be a delay between switching off one leg of the bridge and switching on the other. The delay τ is a function of the integrated resistor $R\tau$ (1.5 kΩ) and an external capacitor C17 connected to pin 10 which also fixes the oscillator frequency. The delay is given by:

$$\tau = R\tau \; C17$$

In multiple L292 configurations (in a typewriter, for example, there may be two systems) it is desirable to synchronise the switching frequencies to avoid intermodulation. This can be done using the configuration shown in figure 10.

Fig. 10 - Ground plane switching noise and modulation phenomena are avoided in multi - L292 systems by syncronizing the chopper rate with this RC network.

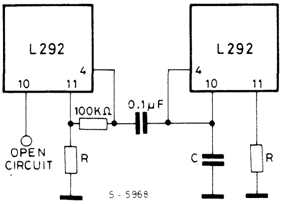

SOFTWARE AND INTERFACING TO THE MICRO

In a typical system the L290/1/2 system is connected to the control microcomputer through ten I/O lines: seven outputs and three inputs.

The outputs are all connected to the L291 D/A converter and consist of the five bit speed demand word, SIGN (which sets the direction) and the speed/position mode select line. Position feedback for the micro comes from the L290 tacho converter and consists of the signals STA, STB (the squared encoder outputs) plus the one-pulse-per rotation signal, STF (figure 11).

Fig. 11 - In a typical system the L290/L291/L292 combination is linked to the micro through seven output lines, two inputs and an interrupt input.

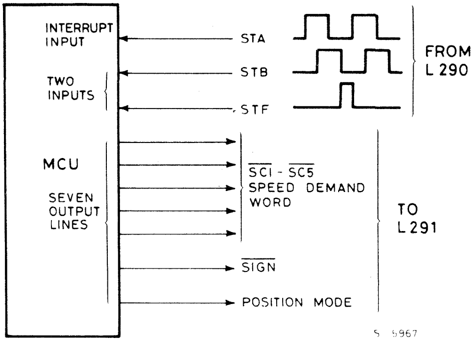

To follow the motor position the micro counts the STA pulses to measure the distance travelled and compares the phase of STA and STB to sense the direction. The most convenient way to do this is to connect the STA line to an interrupt input. An interrupt service routine will then sample STB and increment or decrement the position count depending on the relative phase difference: +90° if STB is high; -90° if STB is low.

It could be argued that the micro doesn't need to sense the direction of the rotation because it controls the direction. In practice, however, it is better to sense the direction to allow for the possibility that the motor may be moved by externally applied forces.

For each movement the micro calculates the distance to be travelled and determines the correct direction. It then sets the L291 to velocity feedback mode, sets the director appropriately and sets the speed demand word for maximum speed (possibly less if the move is very short).

By means of the STA interrupt service routine it follows the changing position, reducing the speed demand word to brake the motor when the target position is very close. Finally, the micro orders the L291 to switch to position loop control for the final precise positioning.

Fig. 12 - Complete application circuit of the system.

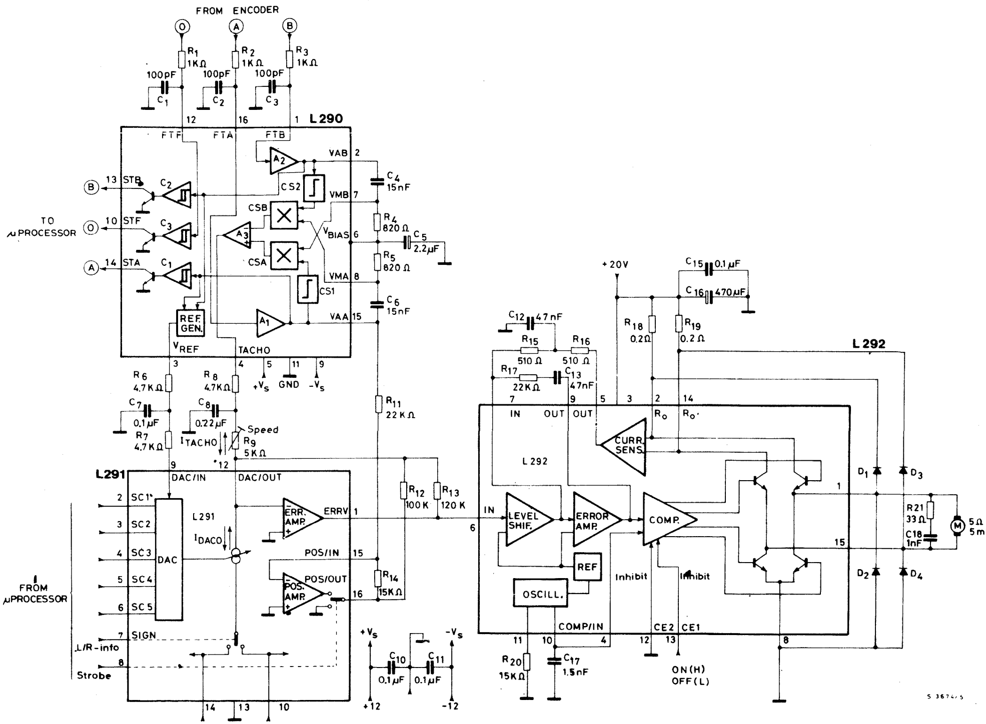

D1 ÷ D4 1A Fast Diodes { $V_F \leqslant 1.2V$ @ $I = 2A$
$t_{rr} \leqslant 200$ ns

Fig. 13 - P.C. board and component layout (1:1 scale)

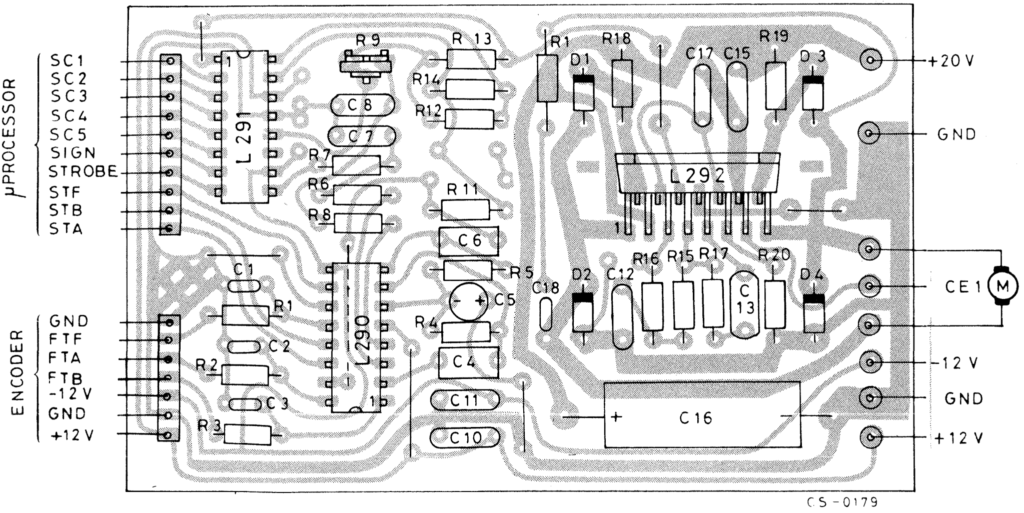

Fig. 14

Component	Recommended value	Purpose	Larger than recommended value	Smaller than recommended value
R1, R2, R3	1 kΩ	To filter the noise on the encoder signals	Offset voltage increase (V_{AA}, V_{AB})	
R4, R5	820 Ω	Differentiator network	Tacho offset and tacho signal increase	Tacho offset increase Tacho signal decrease
R6, R7	4,7kΩ	To set the D/A input current	D/A input current decrease	D/A input current increase
R8	4.7kΩ	To set the motor speed	Motor speed increase	Motor speed decrease
R9	5kΩ	To adjust the motor speed	Danger of oscillation $R9 \leqslant R13/10$	
R11	22kΩ	To set the position loop gain	– Position loop gain decrease	– Position loop gain increase – Danger of oscillation of the motor shaft
R12	100kΩ	To set the position loop gain	– Position loop gain decrease	– Position loop gain increase – Danger of oscillation of the motor shaft
R13	120kΩ	To set the speed loop gain	– Speed loop gain increase	– Speed loop gain decrease
R14	15kΩ	To set the position loop gain	– Position loop gain increase – Danger of oscillation of the motor	– Position loop gain decrease
R15, R16	510 Ω	To filter the feedback current	Danger of output saturation of the current sensing aplifier $R15 + R16 \leqslant 3.3k\Omega$	
R17	22kΩ	To set the gain of the err. amplifier	Increase of the gain at high frequencies	Danger of oscillations $R17 > 5.6k\Omega$
R18, R19	0.2 Ω	To set the transconductance value of the L292	Transconductance decrease (R18, R15). $I_m \leqslant 0.44V$	Transconductance increase
R20	15kΩ	To set the oscillator frequency	Oscillator frequency decrease	Oscillator frequency increase. $R20 \geqslant 8.2k\Omega$
R21	33 Ω	Compensation network		Increase of the peak current in the output transistors during the commutations
C1, C2, C3	100 pF	To filter the noise on the encoder signals	Bandwidth reduction of the low pass filter	Bandwidth increment of the low pass filter
C4, C6	15 nF	Differentiator network	Tacho signal increase	Tacho signal decrease
C5	2.2 μF	By-pass capacitor	Larger set-up time after power on	Reduced by-pass effect at low frequencies
C7	0.1 μF	Low-pass filter for the D/A input current		Increase of the current ripple at low speed
C8	0.22 μ	– Low pass filter for the tacho signal – To determine the dominant pole of the speed loop	Bandwidth reduction of the speed loop	Low filtering at low speed, causing noise on the motor
C10, C11	0.1 μF	Supply by-pass capacitor		Danger of oscillations
C12	47 nF	To filter the feedback current	– Lower value of the damping factor – Danger of oscillations	– Higher value of dumping factor
C13	47 nF	To set the gain of the error amplifier $C13 \cdot R17 = L_M/R_M$		
C15	0.1 μF	Supply by-pass capacitor		Danger of oscillations
C16	470 μF	Supply by-pass capacitor		Ripple increment on the supply voltage
C17	1.5 nF	To set the oscillator frequency and the dead time of the output transistors	– Oscillation frequency reduction – Dead time increment	– Oscillation frequency incremen. – Dead time reduction
C18	1 nF	Compensation network		Danger of oscillations
D1, D2, D3, D4	1A Fast diodes	Recirculation diodes		

When the system is powered up the mechanical subsystem may be in any position so the first step is to initialize it. In applications where the optical encoder never rotates more than one revolution — the daisy wheel of a typewriter, for example — this is simply done by rotating the motor slowly until the STF signal (one-pulse-per-rotation) is detected.

Where the optical encoder rotates more than once the 'one-pulse-per-rotation' signal is not sufficient. An example of this is the carriage positioning servo of a computer printer. In this case the simplest solution is to fit a microswitch on one of the endstops. First the motor is run backwards slowly until the carriage hits the endstop. Then it moves forward until the STF signal is detected. The beauty of this solution is that the endstop microswitch does not need to be positioned accurately.

APPLICATION CIRCUITS

The complete circuit is shown in figure 12; a suitable layout for evaluation is given in figure 13. Component values indicated are for a typical system using a Sensor Technology STRE1601 encoder and a motor with a winding resistance of 5Ω and an inductance of 5 mH (this motor is described fully in figure 17). How to calculate values for other motors is explained further on.

Figure14 explains what each component does and what happens if it is varied. Maximum and minimum values are also indicated where appropriate.

ADDING DISCRETE TRANSISTORS FOR HIGHER POWER

In the basic application, the L292 driver delivers 2A to the motor at 36V. This is fairly impressive for an integrated circuit but not enough for some applications — robots, machine tools etc. The basic system can be expanded to accomodate these applications by adding external power transistors to the L292. This is preferable to simply adding a discrete driver stage in place of the L292 because the L292's current control loop is very useful.

Figure 15 shows how four transistors are added to increase the current to 4, 6 or 8A, depending on the choice of transistor. When coupled to the L290 and L291 this configuration appears to the system as an L292.

The average motor current, I_m, is found from:

$$I_m = \frac{V_i \; 0.044}{R_x}$$

where V_i is the input voltage and R_x is the value of the sense resistors R7 and R8.

Suitable transistors for this configuration are indicated below:

I (A)	V_i(V)	R_x(mΩ)	Q1, Q2	Q3, Q4	D1 – D4
4	9.1	100	BD708	BD707	2A Fast diodes
6	9.1	65	BD908	BD907	3A Fast diodes
8	9.1	50	BDW52A	BDW51A	4A Fast diodes

Fig. 15 - For higher power external transistors are added to the L292. This circuit delivers up to 4A, if 2 BDW51A and 2 BDW52A are used it can deliver 8A.

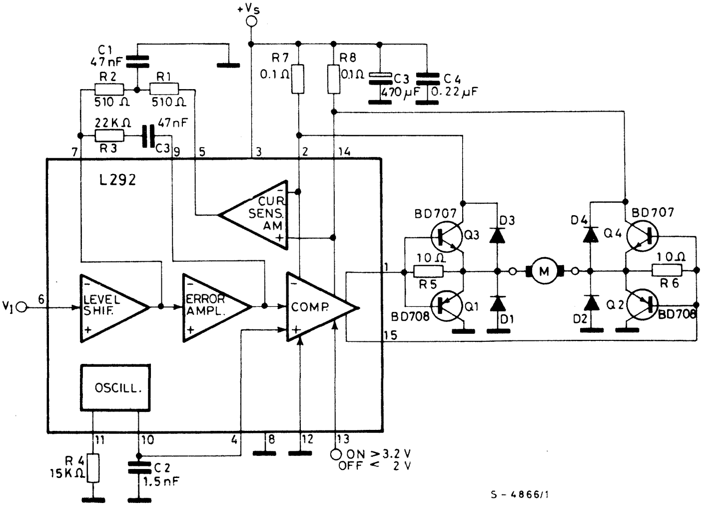

The circuit shown in figure 16 is suitable for motor currents up to 50A at voltages to 150V. Two supplies are used; 24V for the L292 and LS141 and 150V for the external transistors and motor. This circuit too behaves just like an L292, except for the higher power, and connects to the L290 and L291 as usual.

The motor current is given by:

$$I_m = \frac{V_{in} \times 120 \times 10^{-6}\ R}{R_s}$$

where $R_s = R_{s1} = R_{s2} = 12 \times 10^{-3}\ \Omega$

and $390\ \Omega < R < 860\ \Omega$

This gives a range of transconductance values (I_m/V_{in}) from 3.0 A/V (R = 390Ω) to 8.6 A/V (R = 860Ω).

In this circuit the L292 drives two transformers whose secondaries drive the power transistors. The coil ratio of the transformers is 1:20. To limit the duty cycle at which the transformers operate from 15% to 85%, two zener diodes are inserted between pin 7 and pin 9 of the L292. The LS141 op amp supplies current feedback from the transistor bridge to the L292.

Fig. 16 - For higher voltages and currents-up to 150V at 50A - this circuit can be used. It connects to the L290 and L291, behaving just like and L292.

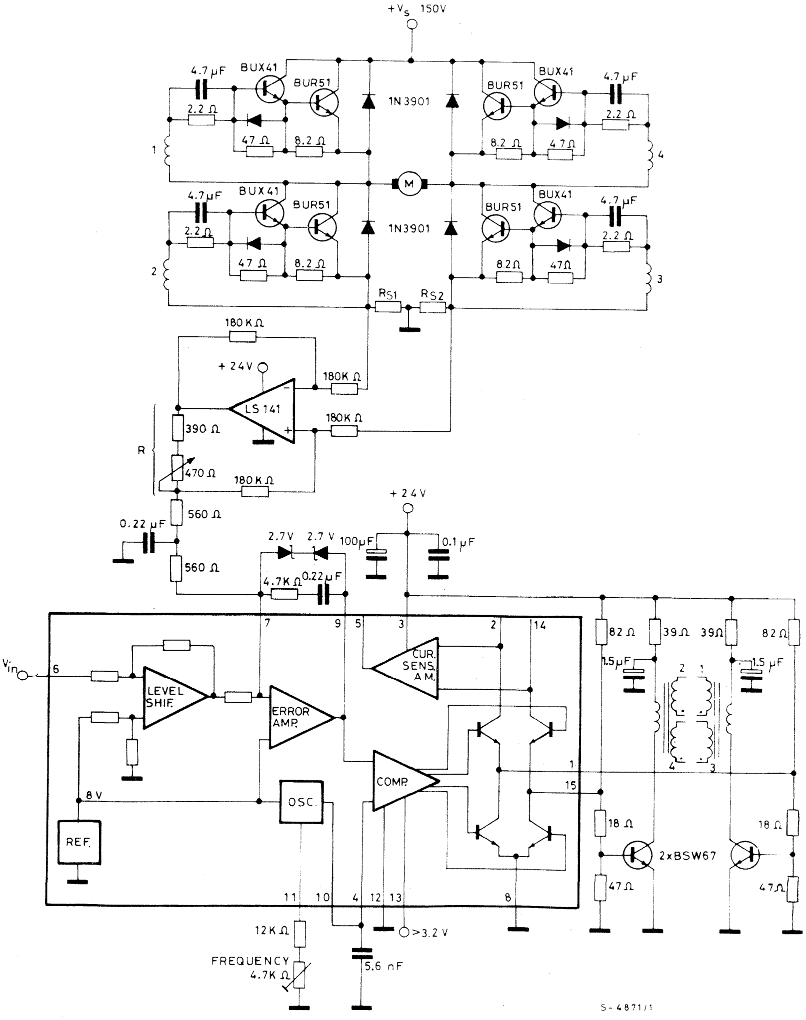

DESIGN CONSIDERATIONS

The application circuit of figure 12 will have to be adapted in most cases to suit the desired performance, motor characteristics, mechanical system characteristics and encoder characteristics. Essentially this adaptation consists of choosing appropriate values for the ten or so components that determine the characteristics of the L290, L291 and L292.

The calculations include:

- Calculation of maximum speed and acceleration; useful both for defining the control algorithm and setting the maximum speed.
- Calculation of R8 and R9 to set maximum speed.
- Laplace analysis of system to set C8, R11, R12, R13 and R14.
- Laplace analysis of L292 loop to set the sensing resistors and C12, C13, R15, R16, R17.
- Calculation of values for C4 and C6 to set max level of tacho signal.
- Calculation of values for R6 and R7 to set D/A reference current.
- Calculation of R20 to set desired switching frequency.

MAXIMUM ACCELERATION

For a permanent magnet DC motor the acceleration torque is related to the motor current by the expression:

$$T_a + T_f = K_T \ I_m$$

where:

I_m is the motor current
K_T is the motor torque constant
T_a is the acceleration torque
T_f is the total system friction torque

The acceleration torque is related to angular acceleration and system inertia by:

$$T_a = (J_m + J_{oe} + J_L) \ a$$

where:

J_m is the moment of inertia of the motor
J_{oe} is the moment of inertia of the encoder
J_L is the moment of inertia of the load
a is the angular acceleration.

In a system of this type the friction torque T_f is normally very small and can be neglected. Therefore, combing these two expressions we can find the angular acceleration from:

$$a = \frac{K_T}{J_m + J_{oe} + J_L} \cdot I_m$$

It follows that for a given motor type and control loop the acceleration can only be increased by increasing the motor current, I_m.

The characteristics of a typical motor are given in figure 17. From this table we can see that:

$K_T = 4.3$ N cm/A (6.07 oz.in/A)
$J_m = 65$ g · cm^2 (0.92×10^{-3} oz.in.s^2)

We also know that the maximum current supplied by the L292 is 2A and that the moment of inertia of the STRE1601 optical encoder, J_{oe}, is 0.3×10^{-4} oz.in.s^2.

The moment of inertia of the load J_L, is unknown but assume, for example, that $J_{oe} + J_L \cong 2 \ J_m$. Therefore the maximum angular acceleration is:

$$a = \frac{6.07 \times 2}{2 \times 0.92 \times 10^{-3}} = 6597.8 \ \text{rad/s}^2$$

Fig. 17 - The characteristics of a typical DC motor.

Motor - Parameter	Value
U_{BB} (V_s)	18V
C. emf. K_E	4.5 mV/min^{-1}
N_o (without load)	3800 rpm
I_{om} (without load)	190 mA
T_f (friction torque)	0.7 N cm
K_T (motor constant)	4.3 N cm/A
Amature moment of inertia	65 g. cm^2
R_M of the motor	5.4 Ω
L_M of the motor	5.5 mH

MAXIMUM SPEED

The maximum speed can be found from:

$$V_{S\ min} = 2\ V_{CEsat} + R_S\ I_m + K_e\ \Omega + R_m\ I_m$$

where:

E = $K_e \ \Omega$ is the internally generated voltage (EMF)
K_e is the motor voltage constant
Ω is the rotation speed of the motor.

For example, if $V_{s\ min} = 20V$
$2\ V_{CEsat} + R_s\ I_m = 5V$ (from L292 datasheet)
$R_m\ I_m = 10.8V$ ($R_m = 5.4\ \Omega$)

we obtain:

$$K_e\ \Omega\ (E) = 4.2V$$

and

$$\Omega = \frac{4.2\text{V}}{4.5\ \text{mV/min}^{-1}} = 933.3\ \text{rpm} =$$

$$= 97.74\ \text{rad/s}$$

The STRE1601 encoder has 200 tracks so this speed corresponds to:

$$V = \Omega\ \frac{200}{60} = 3111.1\ \text{tracks/s.}$$

The time taken to reach maximum speed from a standing start can be found from

$$\Delta t = \frac{\Omega}{a} = \frac{97.74\ \text{rad/s}}{6597.8\ \text{rad/s}^2} = 14.8\ \text{ms}$$

We can also express the acceleration in terms of tracks/s^2 :

$$K = \frac{V}{\Delta t} = \frac{3111.1\ \text{tracks/s}^2}{14.8\ \text{ms}} =$$

$$= 210209.5\ \text{tracks/s}^2$$

Therefore the number of tracks necessary to reach the maximum system speed for our example is:

$$p = \frac{V^2}{2\,K} = 23\ \text{tracks}$$

This information is particularly useful for the programmer who writes the control software.

SETTING THE MAXIMUM SPEED

The chosen maximum speed is obtained by setting the values of R6, R7, R8, R9, C4 and C6 (all shown on the application circuit, figure 12). This is how it's done:

The first step is to calculate R6 and R7, which define the DAC current reference. From the L291 datasheet we know that I_{ref}, the DA converter current reference, must be in the range 0.3 mA to 1.2 mA.

Choosing an I_{ref} of roughly 0.5 mA, and knowing that V_{ref} (the L290s reference output) is typically 5V, it follows that:

$$R6 + R7 = \frac{V_{ref}}{I_{ref}} = 10\ \text{k}\Omega$$

Therefore we can choose R6 = R7 = 4.7 kΩ (5% tolerance).

Substituting the minimum and maximum values of V_{ref} (from the L290 datasheet) and the resistance variations we can now check that the variation of I_{ref} in the worst cases is acceptable.

$$I_{ref\ min} = \frac{V_{ref\ min}}{(R6 + R7)\ max} = 0.46\ \text{mA}$$

$$I_{ref\ typ} = \frac{V_{ref\ (typ)}}{4.7\ \text{k} + 4.7\ \text{k}} = 0.53\ \text{mA}$$

$$I_{ref\ max} = \frac{V_{ref\ max}}{(R6 + R7)\ min} = 0.62\ \text{mA}$$

These values are within the 0.3 mA to 1.2 mA limits.

Now that the reference current is defined we can calculate values for R8 and R9 which define the tacho current at the summing point.

The full scale output current of pin 12 of the L291 (the D/A converter output) is:

$$I_o = 1.937\ \ I_{ref}$$

which is typically 1.02 mA.

The worst case output current is when I_{ref} is at a maximum (0.62 mA) and the I_{out} error is maximum (+ 2%):

$$I_o = 0.62 \times 1.937 \times 1.02 = 1.22\ \text{mA}$$

This less than the 1.4 mA maximum value for I_{out} specified in the L291 datasheet.

Assuming that the maximum DC voltage at the TACHO output of the L290 (pin 4) is 7V (this is the tacho voltage generated at the maximum system speed), we can find the sum of R8 and R9;

$$R8 + R9 = \frac{V_{tacho\ DC}}{I_{o\ typ}} = \frac{7}{1.02} = 6.85\ \text{k}\Omega$$

Therefore we choose R8 = 4.7 kΩ and a 5 kΩ trimmer for R9. R9 is used to adjust the maximum speed.

We can now calculate the ripple voltage and maximum tacho voltage:

$$V_{ripple\ pp} = \frac{\pi}{4}\ (\sqrt{2}-1)\ V_{tacho\ DC} \cong 2.3\ V_{pp}$$

$$V_{tacho\ max} = \frac{\pi}{4}\ \ \sqrt{2}\,V_{tacho\ DC} \cong 7.8\ V_p$$

This value is within the voltage swing of the tacho amplifier (± 9V); that means the choice of $V_{tacho\ DC}$= 7V is correct.

At this point we know the values of R6, R7, R8 and R9. The maximum speed can now be set by choosing values for C4 and C6 which form the differentiation networks on the L290. These values depend on the number of tracks of the optical encoder. For the STRE1601 encoder the capacitor values can be found from figure 18. These curves show how the capacitor values is related to frequency (encoder rotation speed) for different tacho voltages and maximum speed. The example values are $V_{tacho\ DC}$ = 7V and maximum speed = 3111 tracks/sec therefore the value for C4 and C6 is 15 nF.

The values of R4 and R5 must be 820Ω to minimize the offsets.

Fig. 18 - C4 and C6 value versus rotation speed for various maximum tacho voltage values.

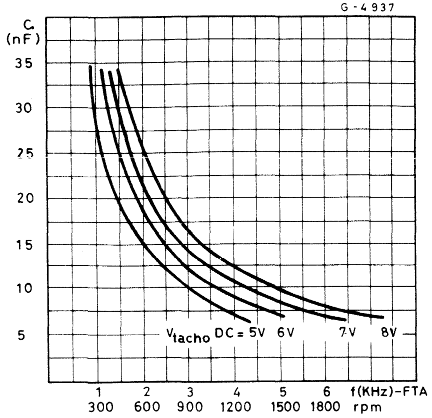

LAPLACE ANALYSIS OF THE SYSTEM

Suitable values for the components R11, R12, R13, R14 and C8 can be found from a Laplace analysis of the system. Figure 19 shows a simplified block diagram of the system which will be useful for the analysis.

The analysis is based on the angular speed Ω and on the motor position θ. The motor is represented, to a first approximation, by the current I_m and by the acceleration torque, T_a, which drives an inertial load J.

There are two conversion factors, K_{sp} and $K\theta$. They link the mechanical parameters (position and speed) with the equivalent feedback signals for the two loops. The values of K_{sp} and $K\theta$ are determined by the encoder characteristics and the gain parameters of the integrated circuits. The open-loop and closed-loop gains are fixed by four external resistors:

- R_{ref} – fixes the reference current (R6 + R7)
- R_{speed} – fixes the speed loop gain (R8 + R9)
- R_{pos} – controls the position loop gain (R12)
- R_{err} – controls the system loop gain (R13).

The stability both of the speed loop and of the speed-position loop are defined by external components.

The fundamental characteristics of the speed control system can thus be determined by the designer.

τ_{sp} is the time constant that determines the dominant pole of the speed loop and is determined by C8, R8 and R9

$$\tau_{sp} = C8 \frac{R8\ R9}{R8 + R9} .$$

Fig. 19

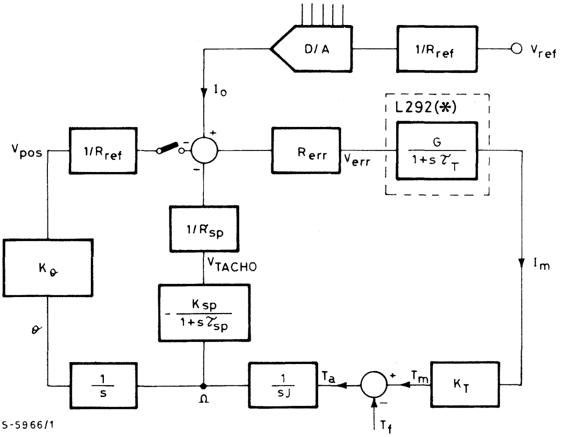

(*) See L292 datasheet for an accurate analysis of this block.

List of terms

s : Laplace variable
K_T : Motor torque constant
T_a : Acceleration torque
T_f : Total system friction torque
J : Total moment of inertia ($J = J_{oe} + J_m + J_L$).
Ω : Speed
θ : Angular position
K_{sp} : Conversion factor that links the motor rotation speed and the TACHO signal.
K_T : Conversion factor that links the motor position and the V_{pos} signal.

SETTING THE L292 COMPONENTS

The sensing resistor and feedback loop component values for the L292 can be calculated easily using the following formulae. A detailed Laplace analysis of this block is given on the L292 datasheet.

a) Sense resistors. $R_s = R18 = R19$

$$\frac{I_m}{V_i} = \frac{R2\ R4}{R1\ R3} \cdot \frac{1}{R_s}$$

$$\Rightarrow \qquad R_s = \frac{R2\ R4\ V_i}{I_m\ R1\ R3}$$

(These resistors are all inside the L292).

where:

I_m Is the motor current
V_i is the input voltage corresponding to I_m.

For example, $I_m = 2A$, $V_i = 9.1V$, resistor values as in figure 7 (L292 internal block diagram)

$$R_s = \frac{0.044}{I_m} \quad V_i = 0.2\ \Omega$$

b) R17, R15, R16, C12, C13

$$G_{mo} = \frac{2\ V_s}{R_m\ V_R}$$

V_s = L292 supply voltage
R_m = motor resistance
V_R = L292 reference voltage

and

$$\xi = \sqrt{\frac{R4\ C13}{4R15\ C12\ G_{mo}\ R_s}}$$

R4 = L292 internal resistor (400Ω)

$R_s = R18 = R19$

A good choice for ξ is $1/\sqrt{2}$. Substituting this value, G_{mo} and the values of R4 and R_S:

$$\xi^2 = \frac{1}{2} = \frac{400\ C13}{4\ R15\ C12 \times 0.2}$$

$$\Rightarrow \frac{1000\ C13}{R15\ C12} = 1$$

Also $$f_T = \frac{0.9}{2\pi\ R15\ C12}$$

Assuming that f_T is 3 kHz, another recommended value:

$$R15\ C12 \cong 47 \times 10^{-6}\ s$$

Therefore we can find C13 :

$$1000\ C13 \cong 47 \times 10^{-6}$$

$$\Rightarrow C13 = 47\ nF$$

Since $$\frac{L_m}{R_m} = R17\ C13$$

$$R17 = \frac{L_m}{C13\ R_m}$$

For the example motor $L_m = 5\ mH$, $R_m = 5.4\Omega$ therefore:

$$R17 = \frac{L_m}{C13\ R_m} = 22\ k\Omega$$

From R15 C12 $\cong 47 \times 10^{-6}$ s, choosing a value of R15; 510 Ω, we have:

$$C12 = 82\ nF$$

Also, R16 = R15 = 510 Ω.

DEAD TIME

C17 sets the switching delay of the L292 which protects against simultaneous conduction. The delay is:

$$\tau = R_\tau\ C17$$

and R_τ is an internal 1.5k resistor. The suggested 1.5 nF value gives a switching delay of about 2.25 μs. This is more than adequate because the transistors have a switch off delay of only 0.5 μs.

SWITCHING FREQUENCY

The switching frequency is set by C17 and R20:

$$f_{osc} = \frac{1}{2\ R20\ C17}$$

R20 must be at least 8.2 kΩ and is varied to set the frequency: the value of C17 is imposed by dead time requirements. Typically the frequency will be 15-20 kHz.

It shoud be outside the audio band to reduce noise but not to high or efficiency will be impaired. The maximum recommended value is 30 kHz.

CURRENT RIPPLE

To reduce dissipation in the motor and the peak output current the ripple, ΔI_m, should be less than 10% of the maximum current.

Since $$\Delta I_m = \frac{V_s}{L_m} \cdot \frac{T}{2}$$

($\frac{T}{2}$ = half period of oscillator) and $$\Delta I_m = 0.1\ I_{m\ max}$$

$$\Rightarrow\ 0.1\ I_{m\ max} = \frac{V_s}{2f\ L_{M\ min}}$$

$$\Rightarrow\ L_{M\ min} = \frac{5\ V_s}{f\ I_{m\ max}}$$

Therefore there is a minimum inductance for the motor which may not always be satisfied. If this is the case, a series inductor should be added and the value is found from:

$$L_{series} = \frac{5\ V_s}{f\ I_{m\ max}} - L_M$$

EFFICIENCY AND POWER DISSIPATION

Neglecting the losses due to switching times and the dissipation due to the motor current, the efficiency of the L292's bridge can be found from:

$$\eta = 1 - \frac{\Delta\ t1}{\Delta\ t1 - \Delta\ t2} \cdot \frac{V_{sat}}{V_s} - \frac{\Delta\ t1}{\Delta\ t1 - \Delta\ t2} \cdot \frac{V_{over}}{V_s}$$

where:

$V_{over} \cong 2V\ (2\ V_{BE} + R_S\ I_m)$

$V_{sat} \cong 4V\ (2\ V_{CEsat} + 3\ V_{BE})$

$\Delta\ t1$ = transistor conduction period

$\Delta\ t2$ = diode conduction period.

If $\Delta\ t1 \gg \Delta\ t2$ and $V_s = 20V$ we obtain:

$$\eta = 1 - \frac{4}{20} = 80\%$$

In practice the efficiency will be slightly lower as a results of dissipation in the signal processing circuit (about 1W at 20V) and the finite switching times (about 1W).

If the power transferred to the motor is 40W, the 80% efficiency implies 10W dissipated in the bridge and a total dissipation of 12W. This gives an actual efficiency of 77%. Since the L292's Multiwatt package can dissipate up to 20W it is possible to handle continuous powers in excess of 60W.

POSITION ACCURACY

The main feature of the system L290, L291, L292 is the accurate positioning of the motor. In this section we will analyse the influence of the offsets of the three ICs on the positioning precision.

When the system is working in position mode, the signal FTA coming from the optical encoder, after suitable amplification, is sent to the summing point of the error amplifier (L291). If there were no offset and no friction, the motor would stop in a position corresponding to the zero crossing of the signal FTA, and then at the exact position required. With a real system the motor stops in a position where FTA has such a value to compensate the offsets and the friction; as a consequence there is a certain imprecision in the positioning. The block diagram, fig. 20, shows the parts of the 3 ICs involved in the offsets. First we will calculate the amount of the offsets at the input of the IC L292 (point A of fig. 20).

Fig. 20

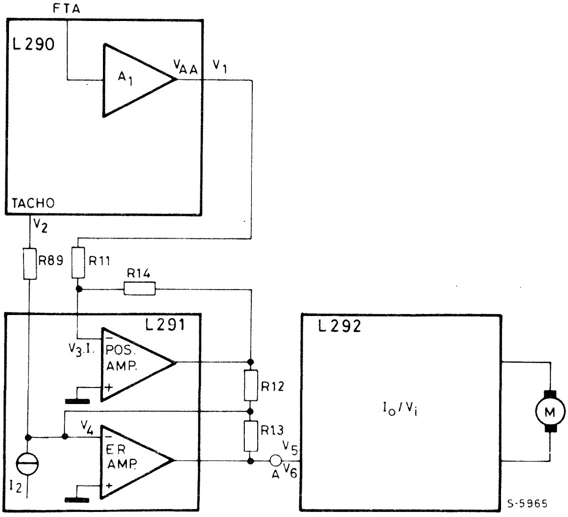

L290

The offset of the TACHO signal, V2, is the main cause of the imprecision of the positioning. Another offset in L290 is V1, the output offset voltage of A1. The contribution at point A is:

$$V_{1A} = V1 \cdot \frac{R14}{R11} \cdot \frac{R13}{R12}$$

$$V_{2A} = V2 \cdot \frac{R13}{R89}$$

L291

In this IC there are the following offsets:

V3 = input offset voltage of the position amplifier
I_1 = input bias current of the position amplifier
I_2 = output offset current of the D/A converter plus ER.AMP bias current
V4 = input offset voltage of the error amplifier.

Their contribution at point A is:

$$V_{3A} = V3 \cdot (1 + \frac{R14}{R11}) \cdot \frac{R13}{R12}$$

$$VI_{1A} = I_1 \cdot R14 \cdot \frac{R13}{R12}$$

$$VI_{2A} = I_2 \cdot R13$$

$$V_{4A} = V4 \quad (1 + \frac{R13}{R12 // R89)})$$

L292

Referring to this IC we must consider the input offset voltage V5. Moreover, we call V6 the input voltage that must be applied to the L292 to keep the motor in rotation, i.e. to compensate the dynamic friction. V6 is not an offset voltage, but has the same effects, and for this reason we have to put it together with the offsets.

$$V_{5A} = V5$$

$$V_{6A} = V6 = \frac{I_6}{\left[\frac{I_o}{V_i}\right]}$$

$\frac{I_o}{V_i}$ = Transconductance of L292

I_6 = Motor current necessary to compensate the dynamic friction

The total offset voltage referred to point A is given by the sum of all the precedent terms:

$$V_A = V_{1A} + V_{2A} + V_{3A} + VI_{1A} + VI_{2A} + V_{4A} + V_{5A} + V_{6A}.$$

The amplitude of the signal FTA necessary to compensate the offset V_A is:

$$V_{FTA} = V_A \cdot \frac{R12}{R13} \cdot \frac{R11}{R14} \cdot \frac{1}{A1}$$

Calling V_M the maximum value of the signal FTA, the phase error of the system is:

$$\alpha = \sin^{-1} \frac{V_{FTA}}{V_M}$$

If α_c is the phase between two consecutive characters, (it may be equal 360° or multiple of it) the percentage error in the character positioning is:

$$\epsilon = \frac{\alpha}{\alpha_c} \cdot 100$$

In these calculations we have not considered how the precision of the signal FTA, coming from the optical encoder, influences the positioning error. The percentage value of the pitch accuracy must be added to ϵ to have the total percentage error in the character positioning. Any DC offset of the mean value of the signal FTA must be multiplied by A1 and added to V1 to obtain its effect on the error.

NUMERICAL EXAMPLE

In this numerical example we will calculated the precision of the positioning in the worst case, i.e. with all the offsets at the max value. The values of the external components are taken from the application circuit. (fig. 12).

R11 = 22K R12 = 100K R13 = 120K R14 = 15K
R89 = R8 + R9 = 6K

From the data sheets of the three ICs we can find:

V1 = 55 mV V2 = 80 mV V3 = 4.5 mV
V4 = 2 mV V5 = 350 mV
I_1 = 0.3 μA I_2 = 0.4 μA

A1 min = 22 dB = 12.6

$$\frac{I_o}{V_i} \text{ min} = 205 \frac{mA}{V}$$

$$V_{Mmin} = 0.4V$$

For I_6 we will consider the value I_6 = 50 mA

$$V_{1A} = 55.10^{-3} \cdot \frac{15}{22} \cdot \frac{120}{100} = 45 \text{ mV}$$

$$V_{2A} = 80 \cdot 10^{-3} \cdot \frac{120}{6} = 1.6V$$

$$V_{3A} = 4.5 \cdot 10^{-3} \; (1 + \frac{15}{22}) \cdot \frac{120}{100} = 9.1 \text{ mV}$$

$$VI_{1A} = 0.3 \cdot 10^{-6} \cdot 15 \cdot 10^{3} \cdot \frac{120}{100} = 5.4 \text{ mV}$$

$$VI_{2A} = 0.4 \cdot 10^{-6} \cdot 120 \cdot 10^{3} = 48 \text{ mV}$$

$$V_{4A} = 2 \cdot 10^{-3} \cdot (1 + \frac{120}{5.6}) = 44.9 \text{ mV}$$

$$V_{5A} = 350\,\text{mV}$$

$$V_{6A} = \frac{50}{205} = 244\,\text{mV}$$

$$V_A = 2.346\text{V}$$

$$V_{FTA} = 2.329 \cdot \frac{100}{120} \cdot \frac{22}{15} \cdot \frac{1}{12.6} = 0.228\text{V}$$

$$\alpha = \sin^{-1} \frac{0.226}{0.4} \cong 35^\circ$$

If we consider an optical encoder with 200 tracks/turn and a daisy wheel with 100 characters, the phase between two consecutive characters is $\alpha_c = 720^\circ$, and then the maximum percentage error we can have is.

$$\epsilon = \frac{35}{720} \cdot 100 \cong 4.8\%$$

From this numerical example we can see that the main contribution to the positioning error is given by the offset of the TACHO signal (V_{2A}), other big contributions are given by the input offset voltage of L292 (V_{5A}) and by the voltage necessary to compensate the dynamic friction of the motor (V_{6A}). This last term is only determined by the motor and can also have greater values.

The error we have calculated is the maximum possible and it happens when all the offsets have the max value with the same sign, i.e. with a probability given by the product of the single probabilities. Considering as an example every offset has a probability of 1% to assume the max value, the probability the error assumes the max value is:

$$P = (10^{-2})^7 = 10^{-14}$$

Fig. 21

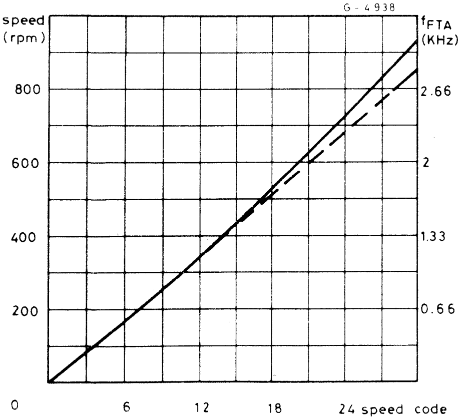

SPEED ACCURACY

If we consider the complete system with L290-L291-L292 driving a DC MOTOR with optical encoder, we can note the speed of the motor is not a linear function of the speed digital code applied to L291. The diagram of fig. 21 shows this function and it is evident that the speed increases more than a linear function, i.e. if the speed code doubles, the speed of the motor becomes more than the double. The cause of this non linearity is the differentiator network R4 C4 and R5 C6 (see fig. 22) that has not an ideal behaviour at every frequency.

Fig. 22

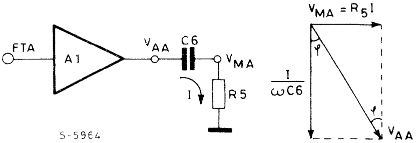

1) $V_{MA} = V_{AA} \sin \varphi$

$\varphi = tg^{-1}\ \omega\ R5\ C6 \qquad \omega = 2\pi f$

2) $V_{MA} = V_{AA} \sin tg^{-1}\ \omega\ R5\ C6$

f = frequency of the signal FTA

This last relation gives the amplitude of the signal V_{MA}; it is evident there is not a linear function between V_{MA} and ω, like $V_{MA} = K\omega$ and the difference is greater if the product ω R5 C6 doesn't respect the disequation $\omega\ R5\ C6 \ll 1$., i.e. at high frequencies.

The phase angle between V_{MA} and V_{AA} should be 90° and then $\varphi = 0$, in our case φ increases with the frequency according to the equation $\varphi = tg^{-1}\ \omega\ R5C6$, and influences the amplitude of the output signal TACHO. In fig. 23 are shown the waveforms that contribute to generate the TACHO signal. A and B are the signals V_{AA} and V_{AB} in phase with the input signals FTA and FTB. C and

Fig. 23

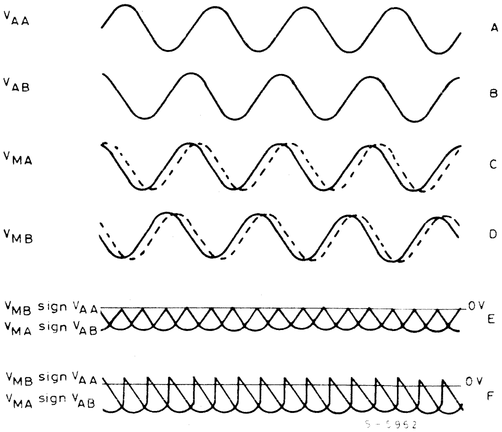

D are the signals V_{MA} and V_{MB}: the continue line indicate the ideal case, in fact the phase between V_{MA} and V_{AA} is 90°; the dotted line is referred to the real case in which the phase is lower than 90°. By adding the two signals shown in E we obtain the TACHO signal, whose expression is:

Fig. 24

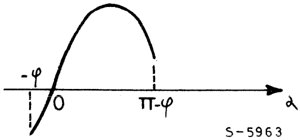

$$V_{TACHO} = V_{MB} \cdot \text{sign}\ V_{AA} - V_{MA} \cdot \text{sign}\ V_{AB}.$$

The signals in E are referred to the ideal case, the ones in F to the real case. It is possible to demonstrate the mean value of the TACHO signal in the real case is lower than the one we could have with an ideal differentiator network and this explains why in fig. 21 the speed of the motor increases more than a linear function. The mean value of the waveforms F is (fig. 24).

$$3)\quad V_m = \int_{-\varphi}^{\pi-\varphi} K1 \sin\alpha \, d\alpha = \frac{2\,K1}{\pi} \cos\varphi$$

Since the waveforms E are half sinewaves, the mean value is

$$4)\quad V'm = \frac{2\,K1}{\pi}$$

We can conclude that two causes contribute to give a TACHO signal lower than the theoretical one, both due to the differentiator network:

a) the amplitude of the signal V_{MA} is lower than $V_{MA} = K\omega$ and we can call $\epsilon 1$ the relative percentage error.

$$\epsilon 1 = \frac{\sin tg^{-1}\ \omega\, R5\, C6 - \omega\, R5\, C6}{\omega\, R5\, C6} \cdot 100$$

b) the mean value of the signals $V_{MA} \cdot$ sign V_{AB} and $V_{MB} \cdot$ sign V_{AA} is lower than the theoretical one because there is a shift in the phase of the signals V_{MA} and V_{MB}. The relative percentage error only due to the shift of the phase is

$$\epsilon 2 = (\cos\varphi - 1) \cdot 100 \qquad \varphi = tg^{-1}\ \omega\, R5\, C6$$

The total percentage decrease of the TACHO signal is given with a good approximation by the sum of $\epsilon 1$ and $\epsilon 2$.

Example:

Consider:

f = 3000 Hz corresponding to

$$n = \frac{3000}{200} \cdot 60 = 900 \text{ rpm of the motor if 200 are the tracks/turn of the encoder}$$

$\epsilon 1 \cong -2.6\%$ with $R5 = 820\ \Omega$, $C6 = 15$ nF

$\epsilon 2 \cong -2.6\%$

$\epsilon 3 \cong \epsilon 1 + \epsilon 2 \cong -5.2\%$

From the diagram of fig. 21 we note that at a speed of 900 rpm corresponds a theoretical speed of 855 rpm with a percentage difference of about 5.2%.

SPEED ACCURACY DUE TO THE D/A CONVERTER

To analyse the influence of the DAC precision on the speed accuracy we will refer to the following (fig. 25).

Fig. 25

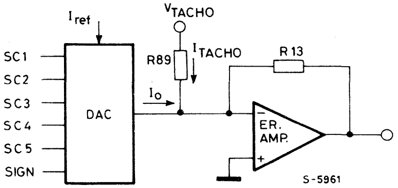

The value of the output current of the DAC I_o depends on I_{ref} and on the digital code defined by the inputs SC1-SC5, while its direction depends on the value of the SIGN input, the max theoretical value of I_o, obtained with SC1-SC5 low, is:

$$I_{OM} = \pm \frac{31}{16} I_{ref}$$

The motor will run at a speed corresponding to the following value of the TACHO signal:

$$V_{TACHO} = - I_{OM} \cdot R89 = \pm \frac{31}{16} I_{ref} \cdot R89$$

This last relation is true if we don't consider the motor friction and the offsets. Consider now the possible spreads we can have in the motor speed due to the DAC. If we call I_{OM1} the value of the max output current I_o corresponding to the SIGN LOW and I_{OM2} the one corresponding to the SIGN HIGH, the percentage error we have in the max speed from the positive to the negative value is:

$$\epsilon 4 = \frac{I_{OM1} + I_{OM2}}{I_{OM}} \cdot 100$$

Note that we have consider the sum of I_{OM1} and I_{OM2} because they have opposite signs. This kind of error is principally due to a different gain of the DAC between the two conditions of the SIGN LOW and HIGH. An equal difference of I_{OM1} and I_{OM2}, from I_{OM} $(|I_{OM1}| - |I_{OM}| = |I_{OM2}| - |I_{OM}|)$ doesn't constitute a speed error because this shift from the theoretical value can be compensated by adjusting the resistor R89 that is formed by a fixed resistor in series with a potentiometer.

With the guaranteed values on the L291 data sheet we can calculate for $\epsilon 4$ the max value:

$$\epsilon 4 = \frac{21\ \mu A}{1.4\ mA} \cdot 100 = 1.5\%$$

Another characteristic of a D/AC is the linearity, that in our case is better than ± 1/2 LSB. This value is sufficient to guarantee the monotonicity of I_O, and then of the speed of the motor, as a function of the input digital code. The precision of ± 1/2 LSB implies a spread of the speed at every configuration of the input code of ± 1.61% referred to the maximum speed. The max percentage error we can have is then greater at low level speed (± 50% at min speed) and has its minimum value at the maximum speed (1.61%).

ACCURACY DUE TO THE ENCODER

The amplitude of the signals FTA and FTB determines the value of the TACHO signal. This amplitude must be constant on the whole range of the frequency, otherwise it is not possible to have a linear function between the TACHO signal and the frequency. The spread of the amplitudes of the two signals FTA and FTB between several encoder can be compensated by adjusting the potentiometer R9 (see fig. 12).The phase between the two signals should be 90°. If there is a constant difference from this value, a constant factor reduction of the TACHO signal results that can be compensated with the potentiometer R9. If the difference from 90° is random, also the reduction of the TACHO signal is random in the same way, and by means of R9 it is possible to compensate only the mean value of that reduction.

SPEED CONTROL OF DC MOTORS WITH THE L292 SWITCHMODE DRIVER

Power dissipation in DC motor drive systems can be reduced considerably with an L292 switchmode driver. This application guide describes two speed control systems based on this device; one voltage controlled and one controlled by a 6-bit binary word. Both examples are designed for 60W motors equipped with tacho dynamos.

The L292 is a monolithic power IC which functions effectively as a power transconductance amplifier. It delivers a load current proportional to an input voltage, handling up to 2A at 18-36V with a bridge output stage. Completely self-contained, it incorporates internal switchmode circuitry and all the active components to form a current feedback loop.

The L292 is designed primarily for use with an L290 and L291 in DC motor servopositioning applications. However, the L292 can be useful in a wide range of applications as the two examples here show. The first is a simple tachometer feedback circuit, the speed of which is controlled by a DC voltage; direction is controlled by the polarity of this voltage. The second circuit is controlled digitally and includes an L291 D/A converter.

SYSTEM WITH DC CONTROL

In this system the control quantity is a dc voltage variable between

$$+V_{iM} \text{ and } -V_{iM}$$

Since the quantity under control is the speed of the motor, it is required that it varies linearly in function of the control voltage.
A simplified circuit diagram of the system is shown in fig. 1.

The current I_1, proportional to the set voltage V_i, and the current I_2, proportional to the speed of the motor, are fed to the sum point of the error amplifier. Assuming that the motor does not drain current, the system is in a steady-state condition whenever $I_1 = -I_2$; as a matter of fact, in this case the output from the error emplifier V_o is 0V. During transients, the voltage V_o will assume a value $V_o = -R3 (I_1 + I_2)$ and consequently, since the L292 integrated circuit operates as a transconductance (G_m), a mean current $I_m = G_m \cdot V_o$ will flow in the motor determining an acceleration proportional to it.

Fig. 1 - Simplified circuit diagram of DC control system

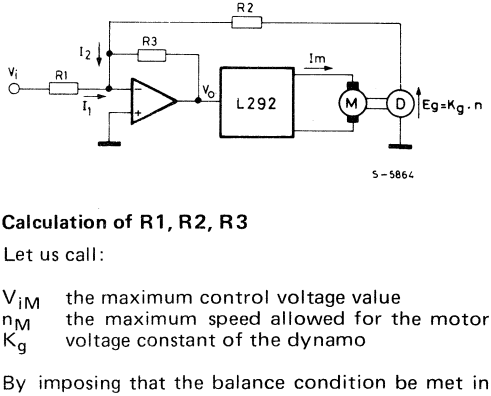

Calculation of R1, R2, R3

Let us call:

V_{iM} the maximum control voltage value
n_M the maximum speed allowed for the motor
K_g voltage constant of the dynamo

By imposing that the balance condition be met in correspondance to the maximum rotation speed the following equation is obtained:

$$I_1 = -I_2 ; \quad \frac{V_{iM}}{R1} = -\frac{K_g \cdot n_M}{R2}$$

Since R2 is the impedance which the tachometer dynamo is loaded on to and its value is recommended by the manufacturer, it is possible from the previous relationship to determine the value of R1.
Resistor R3 determines the system gain. It's best to keep the gain as high as possible (and consequently R3 as high as possible) to obtain a high response speed of the system, even for small variations in the control voltage. On the other hand, an excessive gain would cause excessive overshoot around the balance conditions at the end of transients. Consequently, a trade-off must be made between the two opposing requirements in select-

ing the final gain. The value for R3 should be theoretically determined by studying the transfer function, by knowing the electrical and mechanical constants of the motor as well as the load applied to it.

A complete diagram of the circuit actually realized is shown in fig. 2, while fig. 3, shows the characteristic $n = f\,(V_i)$ obtained.

Resistor R2 drawn in the simplified circuit diagram has been split here in two parts and, in addition, a capacitor has been interposed to ground to filter the signal coming from the tachometer dynamo.

The curve n. 1 in fig. 3 refers to the operation of the motor in no-load condition, with a current drain of 200 mA; the curve n. 2 refers to a motor loaded so as to drain a current of 1A. By disregarding the discontinuity around the origin, it can be noted that the characteristics are linear over the whole control voltage range.
By analyzing the curves around the origin, it can be noted that the motor stands still as long as the input signal does not exceed a certain threshold level, which is as much higher as the current drained by the motor is higher.

Let us call G_m the transconductance of L292, and I the starting current of the motor; the voltage which must be available at the input of L292 in order that the motor starts turning is:

$$V_o = \frac{I}{G_m} \text{ with } G_m = 220\ \frac{mA}{V} \text{ (typical value)}$$

The corresponding control voltage will be:

$$V_i = V_o \cdot \frac{R1}{R3} = \frac{I}{G_m} \cdot \frac{R1}{R3}$$

and it is as much lower as the gain of the error amplifier is higher.
The presence of a control voltage interval in which the motor stands still, can be useful when it is required that, for a certain position of potentiometer P1 (see fig. 2), the motor speed be zero. An other method to hold the motor still is to use the inhibits of L292, for instance by grounding pin 13.

Fig. 2 - Complete circuit diagram

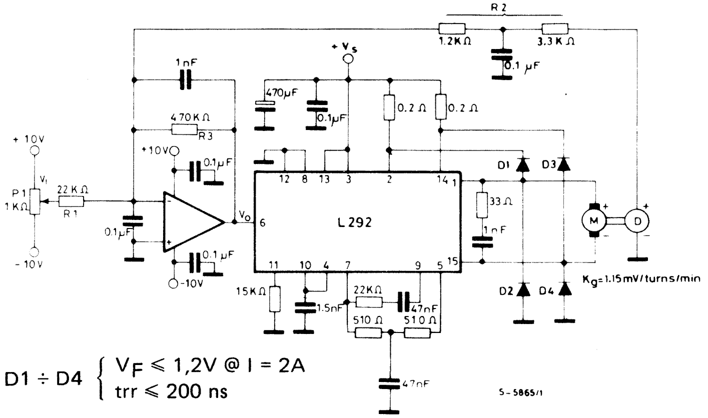

$$D1 \div D4 \begin{cases} V_F \leqslant 1{,}2V \ @ \ I = 2A \\ trr \leqslant 200 \text{ ns} \end{cases}$$

It can be noted from fig. 3 that, by keeping the control voltage V_i constant, the speed varies according to the motor current drain.
Let us call ΔI the current variation; the voltage variation required at the input of L292 is

$$\Delta V_o = \frac{\Delta I}{G_m}$$

since the control voltage is constant, to generate this ΔV_o it is necessary that the rotation speed be varied by a quantity Δn such as to have:

$$K_g \cdot \Delta n \cdot \frac{R3}{R2} = \Delta V_o = \frac{\Delta I}{G_m}$$

$$\Delta n = \frac{\Delta I}{G_m\ K_g} \cdot \frac{R2}{R3}$$

(Δ I shall be taken with its sign)

Fig. 3 - Output characteristics of the circuit in fig. 2

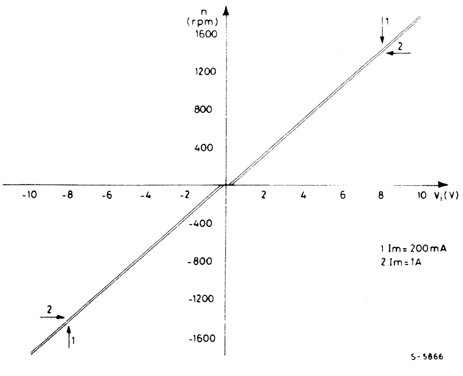

In this case too, the variation Δ n is as much lower as the error amplifier gain is higher. With the circuit shown in fig. 2 Δ n is approximately 30 turns/min. with Δ I = 800 mA, Δ n = 0.037 turns/mA.min approx.

It is possible to adopt a circuit which prevents the variation in the number of turns in function of motor current. The problem is to "sense" the current flowing through the motor and to send a current proportional to it to the sum point of the error amplifier. The complete circuit which includes, beside the voltage feed-back loop, also a current feed-back loop, is illustrated in fig. 4.

Fig. 4 - Complete circuit with current feedback

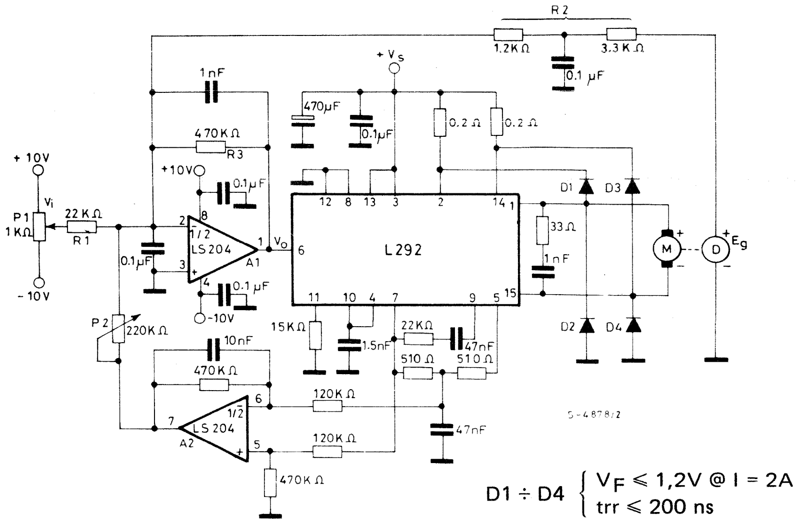

In the integrated circuit L292, a current proportional to the mean current drained by the motor flows between pin 5 and pin 7.
An operational amplifier amplifies the voltage drop provoked by this current across a 510 Ω resistor and sends a current to the sum point which is consequently proportional to the mean current in the motor, the value of which can be made vary by acting on potentiometer P2. By properly adjusting P2, a condition can be achieved in which the speed does not change when the current drained by the motor varies.

The discontinuity around the origin, which was present in the previous circuit (fig. 2), is practically negligible in the circuit shown in fig. 4.

The characteristic n = f (V_i) relevant to the circuit of fig. 4 is shown in fig. 5, and this characteristic does not substantially change over the whole range of currents allowed by the L292 (up to 2A).
In the circuit described above if the motor stall condition is requested. it is preferable to act on the inhibits of the integrated circuit L292, for instance by grounding pin 13, instead of adjusting potentiometer P1: as a matter of fact, the exact position of this potentiometer is difficult to obtain, since the characteristic crosses the axis V_i in one only point (this means that n is only 0 for a very narrow interval of V_i).

Fig. 5 - Output characteristic of the circuit in fig. 4

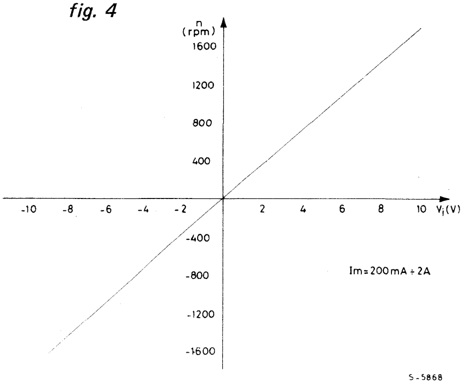

SYSTEM WITH DIGITAL CONTROL

In this system the speed information is given to the circuit by a binary code made up of 5 information bits plus one sign bit, which determines whether the movement shall be clockwise or counterclockwise. For the circuit implementation, the integrated circuits L291 (which includes a D/A converter and two operational amplifiers) and L292 are used.
A simplified circuit diagram is shown in fig. 6.

Fig. 6 - Simplified circuit diagram (digital control)

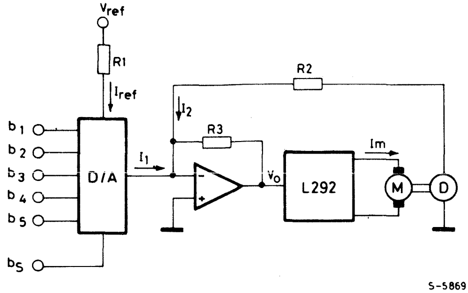

The current value I_1 depends on the value of I_{ref} and on the value of inputs b_1 through b_5, where its sign depends on the b_5 input.
The maximum value for I_1, which is obtained whenever inputs b_1 through b_5 are low, is:

$$I_{1\,max} = I_{ref}\,\frac{31}{16} = \frac{V_{ref}}{R1}\cdot\frac{31}{16}$$

In order to have the system in a steady state condition (no current drained by the motor), it must be:

$$I_1 = -I_2$$

By imposing the balance condition at the maximum speed, one obtains: $I_{1\,max} = -I_{2\,max}$

$$\frac{V_{ref}}{R1}\cdot\frac{31}{16} = -\frac{K_g\,n_M}{R2}$$

where

K_g = dynamo's voltage constant
n_M = maximum speed preset for the motor.

The current I_{ref}, and consequently the ratio $V_{ref}/R1$, must lie within a certain range imposed by the D/A converter actually used.
In our case, this range is 0.3 to 1 mA. The values of R1 and R2 can be determined from the previous relationship. The same considerations made in the description of the DC control system apply for the selection of R3.

A complete diagram of the circuit implemented is indicated in fig. 7, while the input versus output characteristics is shown in fig. 8.

Fig. 7 - Complete circuit diagram

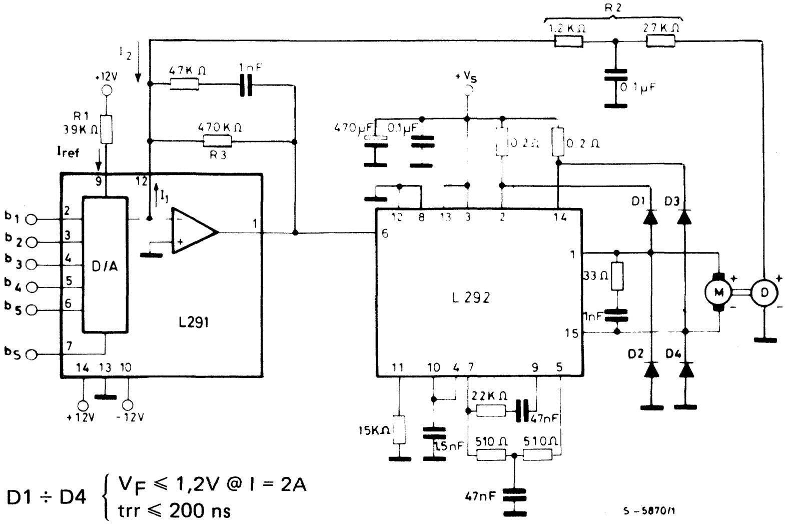

D1 ÷ D4 $\left\{ \begin{array}{l} V_F \leq 1{,}2V \;@\; I = 2A \\ trr \leq 200\ ns \end{array} \right.$

In the graph of fig. 8 the rotation speed of the motor is represented on ordinates, while the decimal speed code, corresponding to the binary code applied to inputs b_1 through b_5, is represented on abscissae.
The abscissa 1 corresponds to the minimum speed code, i.e. input b_1 low and remaining inputs high, since the least significant input is b_1 and the active status of inputs is low. The abscissa 31 corresponds to the maximum speed code, i.e. all inputs b_1 through b_5 low. The negative abscissae have been obtained by changing the status of the b_5 input. The graph in fig. 8 should have been made up of a number of dots; these dots have been joined together with an ininterrupted line for convenience. This graph has the same features as the graph in fig. 3, i.e. the curve features a discontinuity around the origin, and it lowers as long as the motor current drain increases. In this case too, the circuit in fig. 7 can be modified in order to

Fig. 8 - Output characteristic of the circuit in fig. 7

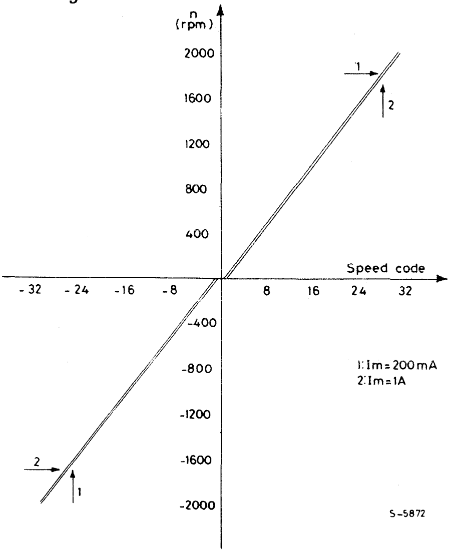

prevent that the speed vary in function of the motor load, by adding a current loop in the control circuit, by using the remaining operational amplifier available in the integrated circuit L291.
Since this amplifier has only the inverting input available, while the non-inverting input is grounded, a circuit arrangement as schematically shown in fig. 9 has been adopted in order to have an output signal referred to ground, given an input signal referred to a reference voltage (in L292) of approximately 8V.

Fig. 9 - Translator circuit

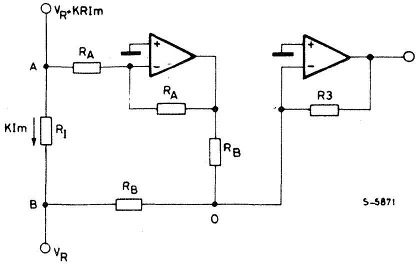

Resistors R_A and R_B must be high-precision resistors in order to have output 0 with no I_m current present. In the practical implementation, resistors with an accuracy of 5% are used and the ends of a potentiometer are interposed between resistors R_B and the output to the sum point of the error amplifier is made through the cursor. The gain of this current loop is proportional to the ratio R3/R_B. A complete circuit diagram is shown in fig. 10.

Since, for reasons of gain, resistor R_B must be 27 kΩ and, if connected to pin 7 of L292, should have subtracted too much current by thus affecting the correct operation of L292, it has been connected to pin 11, having the same potential as pin 7. Consequently, the resistance value between pin 11 and ground has been modified, in order to maintain the switching frequency of L292 unchanged. In order to have a correct adjustment of potentiometer P1, it is enough to set the O speed code (b_1 through b_5 high) and turn the cursor until the motor stops.

The input versus output characteristic obtained with the circuit of fig. 10 is indicated in fig. 11.

Fig. 10 - Complete circuit with current feedback

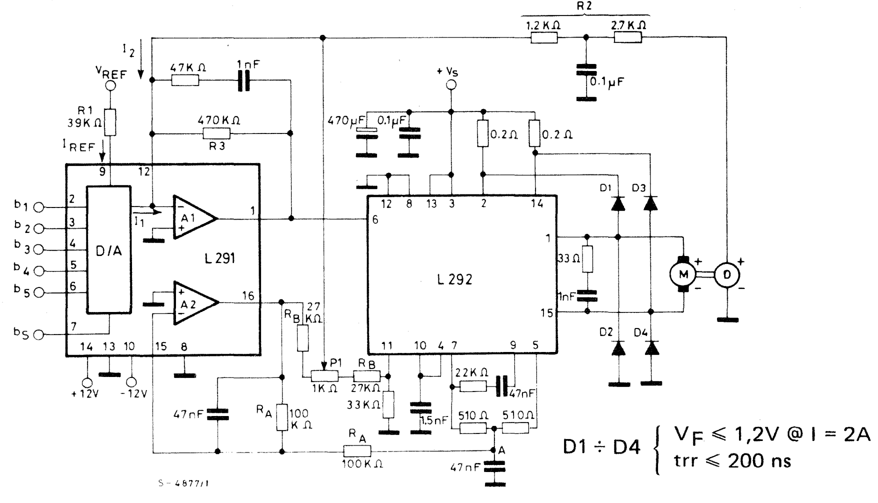

D1 ÷ D4 { $V_F \leqslant$ 1,2V @ I = 2A
trr $\leqslant$ 200 ns

Fig. 11 - Output characteristic of the circuit in fig. 10

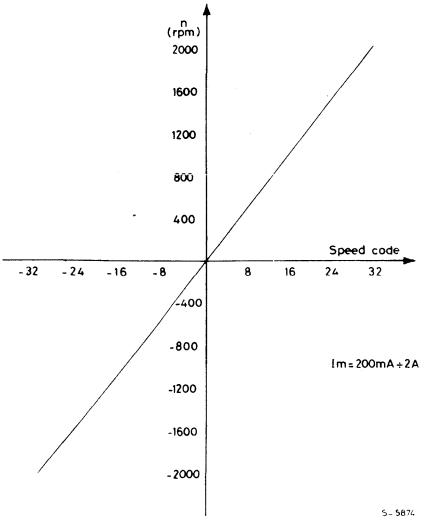

RESPONSE TO INPUT STEP

Measurements have been taken on the circuits described in the previous paragraphs, in order to analyze how the motor speed varies when a step variation is imposed to the input.

For the system DC control, the control voltage has been changed from 0 to the maximum value V_{iM} and down to 0 again. For the digital system the speed code has been changed from 0 (b_1 through b_5 high) to the maximum value (b_1 through b_5 low) and down to 0 again. When the control quantity changes from 0 to the maximum value, the output voltage of the error amplifier (V_O, fig. 1 and fig. 6) assumes its maximum value, since the feed-back signal coming from the tachometer dynamo initially 0. In these conditions, L292 supplies the motor with the maximum current (2A) and maintains it until the motor speed is sufficiently close to the maximum value.

Since the motor is powered from a constant current, it moves with a constant acceleration and consequently its speed grows linearly from 0 up to the maximum value over the time interval t_a. The time needed for the motor to reach the maximum speed also depends, besides the current, on the electrical and mechanical characteristics of the motor and on the moment of inertia of the load applied to the motor. When the control quantity changes from the maximum value to 0, the output of the error amplifier V_o assumes the maximum value, but with an opposite sign with respect to the previous case, and the current flowing in the motor is also reversed and tends to brake it, by making the speed linearly decrease from the maximum value down to 0 over the time period t_f.

The no-load characteristics, relevant to the motor used for the previous tests, are shown in fig. 12. The times t_a and t_f are not equal to each other, which circumstance is basically due to the frictions which, during the acceleration phase, oppose increase of speed, while during the deceleration phase they contribute to make the speed decrease. As a matter of fact, from the movement equation:

$$J\ddot{\Theta} + D\dot{\Theta} + T_f = K_T\ I_M$$

where:

J = System moment of inertia
D = Coefficient of viscous friction
T_f = Braking couple
K_t = Motor constant
$\dot{\Theta}$ = Angular speed
$\ddot{\Theta}$ = Angular acceleration

and by disregarding the term $D\dot{\Theta}$, one obtains:

$$\ddot{\Theta} = \frac{K_T \cdot I_M - T_f}{J}$$

where from it can be seen that $|\ddot{\Theta}|$ is greater if I_M is negative.

Fig. 12 - Pulse response

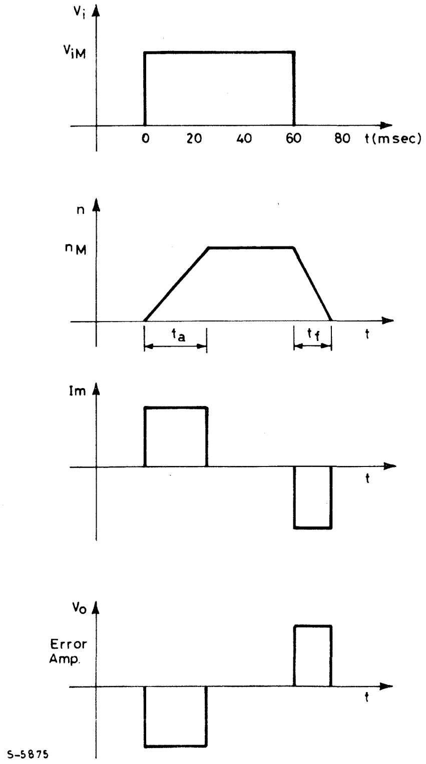

APPLICATIONS OF MONOLITHIC BRIDGE DRIVERS

High power monolithic bridge drivers are an attractive replacement for discrete transistors and half bridges in applications such as DC motor and stepper motor driving. This application guide describes three such devices – the L293, L293E and L298 – and presents practical examples of their application.

The L293, L293E and L298 each contain four push-pull power drivers which can be used independently or, more commonly, as two full bridges. Each driver is controlled by a TTL-level logic input and each pair of drivers is equipped with an enable input which controls a whole bridge. All three devices feature a separate logic supply input so that the logic can be run on a lower supply voltage, reducing dissipation. This logic supply is internally regulated.

Additionally, the L293E and L298 are provided with external connections to the lower emitters of each bridge to allow the connection of current sense resistors. The L293E has separate emitter connections for each channel; the L298 has two, one for each bridge.

Figure 1 shows the internal structure of the L293, L293E and L298. The L293 and L293E are represented as four push pull drivers while the internal schematic is given for the L298. Though they are drawn differently the L293E and L298 are identical in structure; the L293 differs in that it does not have external emitter connections.

Fig. 1 – The L293, L293E and L298 contain four push pull drivers. Each driver is controlled by a logic input and each pair (a bridge) is controlled by an enable input. Additionally, the L293E has external emitter connections for each driver and the L298 has emitter connections for each bridge.

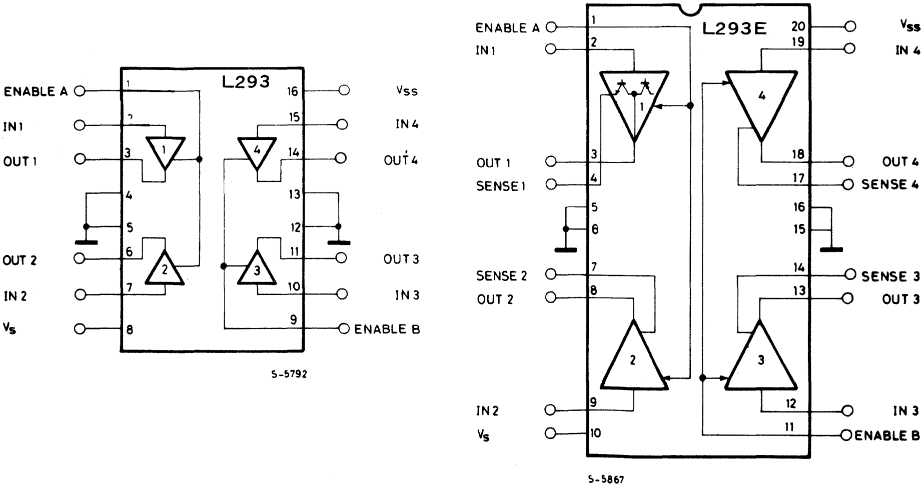

Fig. 1 (continued)

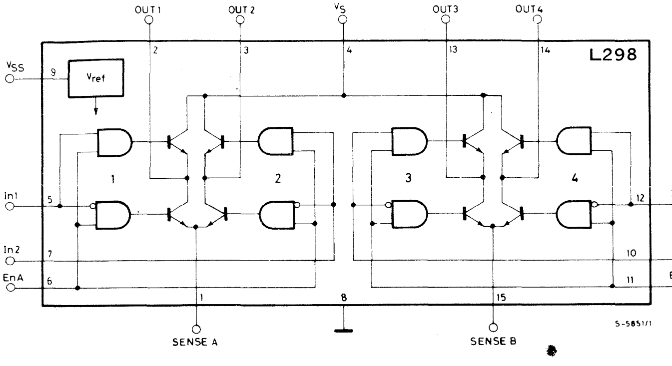

The L293 is packaged in a 12 + 4 lead POWERDIP package (a 16-pin DIP with the four center leads used to conduct heat to the PC board copper) and handles 1A per channel (1.5 peak) at voltages up to 36V.

The L293E, also rated at 1A/36V, is mounted in a 16 + 4 lead POWERDIP package. A 15-lead MULTIWATT plastic power package is used for the L298 which handles up to 2A per channel at voltages to 46V.

All three devices includes on-chip thermal protection and feature high noise immunity. The high switching speed makes them particularly suitable for switch mode control.

Fig. 2 – For higher currents outputs can be paralleled. Take care to parallel channel 1 with channel 4 and channel 2 with channel 3.

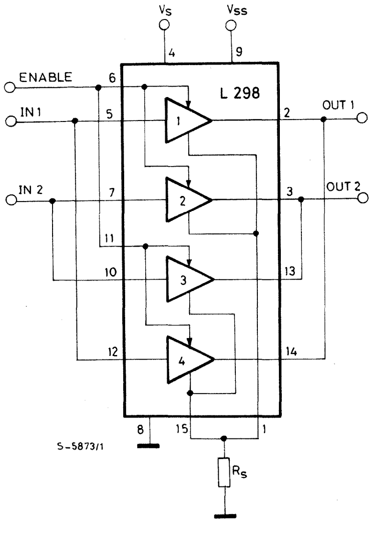

PARALLELING OUTPUTS

Higher output currents can be obtained by paralleling the outputs of both bridges. For example, the outputs of an L298 can be connected in parallel to make a single 3.5A bridge. To ensure that the current is fairly divided between the bridges they must be connected as shown in figure 2. In other words, channel one should be paralleled with channel four and channel two paralleled with channel three. Apart from this rule the connection is very straightforward – the inputs, enables, outputs and emitters are simply connected together.

The outputs of an L293 or L293E can also be paralleled – in this case too channel 1 must be paralleled with channel 4 and channel 2 with channel 3.

But if two bridges are needed this is not a good idea because an L298 may be used. However, if only one bridge is required an L293 connected as a single bridge may be cheaper than an underutilized L298.

SHORT CIRCUIT PROTECTION

L293 and L298 drivers can be damaged by short circuits from the output to ground or to the supply. Short circuits to ground are by far the most common and can be protected against by the circuit shown in figure 3.

When the output is short circuited the input is pulled low after a delay of roughly 10 μs, a period determined by the RC time constant. The upper transistor of the output stage is thus turned off, interrupting the short circuit current. When the short is removed the circuit recovers automatically. This is shown by the waveforms of figure 4.

Note that if the short circuit is removed while V1 is high the output stays low because the capacitor C is charged to V_{IH}. The system is reset by the falling edge of V1, which discharges C.

Fig. 3 – This circuit protects a driver from output short circuits to ground.

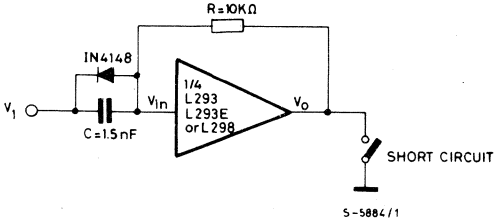

Fig. 4 – Waveforms illustrating the short circuit protection provided by the circuit of fig. 3.

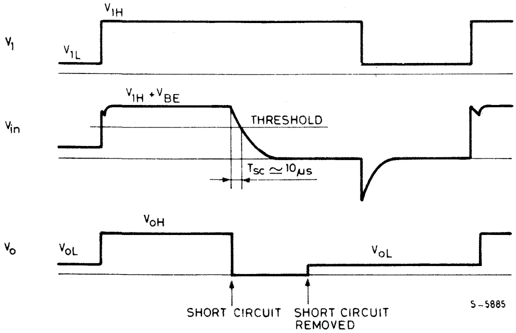

DC MOTOR DRIVING

In applications where rotation is always in the same sense a single driver (half bridge) can be used to drive a small DC motor. The motor may be connected either to supply or to ground as shown in figure 5.

The only difference between these two alternatives is that the control logic is inverted — a useful fact to remember when minimising control logic.

Each device can drive four motors connected in this way. The maximum motor current is 1A for the L293 and 2A for the L298. However, if several motors are driven continuously care should be taken to avoid exceeding the maximum power dissipation of the package.

Each motor in this configuration is controlled by its own logic input which gives two alternatives: run and fast stop (the motor shorted by one of the transistors).

The enable/inhibit inputs also allow a free running motor stop by turning off both transistors of the driver. Since these inputs are common to two channels (one bridge) this feature can only be used when both channels are disabled together.

Fig. 5 – For rotation in one direction DC motors are driven by one channel and can be connected to supply or ground.

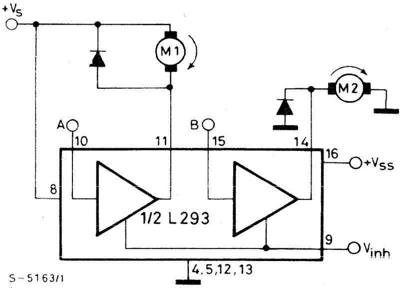

V_{inh}	A	M1	B	M2
H	H	Fast motor stop	H	Run
H	L	Run	L	Fast motor stop
L	X	Free running motor stop	X	Free running motor stop

L = Low H = High X = Don't care

Fig. 6 – A bridge is used for bidirectional drive of DC motors.

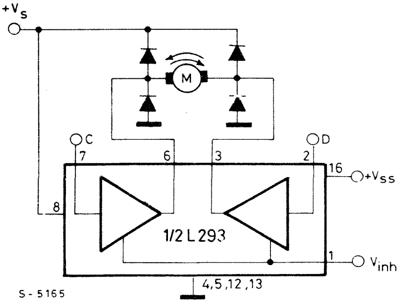

INPUTS		FUNCTION
V_{inh}= H	C = H; D = L	Turn right
	C = L; D = H	Turn left
	C = D	Fast motor stop
V_{inh}= L	C = X; D = X	Free running motor stop

L = Low H = High X = Don't care

A full bridge configuration is used to drive DC motors in both directions (figure 6). Using the logic inputs of the two channels the motor can be made to run clockwise, run anticlockwise or stop rapidly.

Again, the enable/inhibit input is used for a free running stop — it turns off all four transistors of the bridge when low. A very rapid stop may be achieved by reversing the current, though this requires more careful design to stop the motor dead. In practice a tachometer dynamo and closed loop control are usually necessary. Like the previous circuit, this configuration is suitable for motors with currents up to 1A (L293/L293E) or 2A (L298).

The motor speed in these examples can be controlled by switching the drivers with pulse width modulated squarewaves. This approach is particularly suitable for microcomputer control.

For unidirectional drive with a single channel the PWM control signal can be applied to either the channel input or the appropriate enable input. In both cases the recirculation path is through the suppression diode and motor, giving a fairly slow decay. From a practical point of view it is preferable to control the channel input because the circuit response is faster. This is very convenient because each channel has an independent input.

The situation is different for bidirectional motors driven by a bridge. In this case the two alternatives have different effects. If the channel inputs are driven by the PWM signal, with suitable logic, the recirculation path is through a diode, the motor and a transistor (figure 7a), giving a slow decay. On the other hand, if the enable input is controlled the recirculation path is from ground to supply through two diodes and the winding. This path gives a faster decay (figure 7b).

Figure 8 shows a practical example of PWM motor speed control. This circuit includes the oscillator and modulator and allows independent regulation of the speeds of the two motors. The channel inputs are used to control the direction.

An interesting feature of this circuit is that it takes advantage of the threshold of the enable/inhibit input to economise on comparators. The TBA820M audio amplifier generates triangle waves, the DC level of which is varied from 0 to 5V by means of P1 and P2.

Since the switching threshold of the L293's enable/inhibit inputs is roughly 2V the duty cycle of the output current (and hence the motor speed) is controlled by the setting of the potentiometer.

In this circuit the switching frequency is set by R1/C1 and the amplitude of the oscillator signal is set by the divider R2/R3.

Fig. 7a – If the current shown by the solid line is interrupted by bringing A low the current recirculates round the dotted path. Decay is slow.

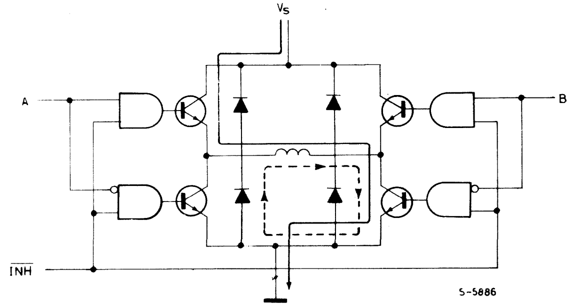

Fig. 7b – If the enable input is brought low to interrupt the current indicated by the solid line the current recirculates from ground to V_S and the decay is faster.

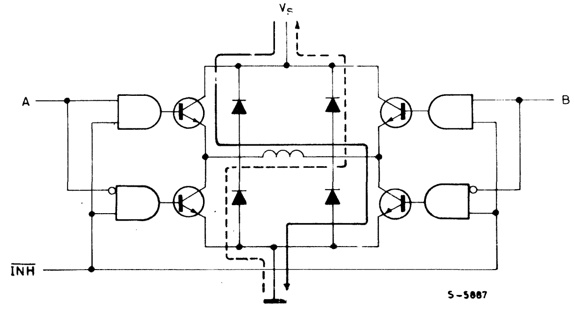

Fig. 8 – This circuit illustrates PWM control of the motor speed. The speed of each motor is controlled independently.

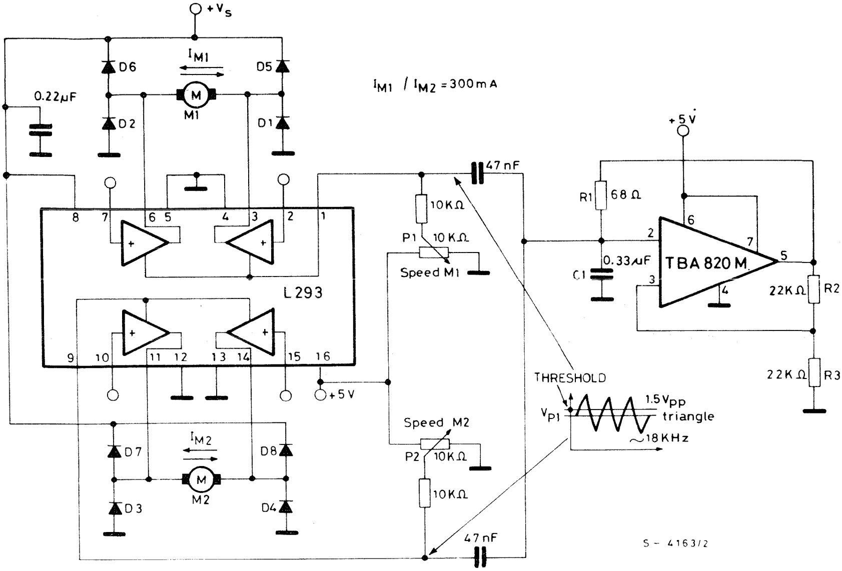

STEPPER MOTOR DRIVING

Monolithic bridge drivers are extremely useful for stepper motor driving because they simplify the use of bipolar motors. This is an important point since a bipolar stepper motor costs less than an equivalent unipolar motor (it has fewer windings) and gives more torque per unit volume, other things being equal.

The basic configuration for bipolar stepper motor driving is shown in figure 9. In this example it is assumed that a suitable translator (phase sequence generator) is connected to the four channel inputs.

Either an L293 or an L298 can be used in this circuit; an L293E would be wasted compared to an L293 because load current regulation, and hence the sense resistor connection, is not used.

But load current regulation is highly desirable to exploit the performance characteristics of the motor. Using an L293E or L298 this can be implemented by adding an LM339 quad comparator as shown in figure 10.

This is another circuit that requires an external translator but it provides independent PWM chopper regulation of the current in each winding.

Looking at motor phase one, the comparator output is initially high, enabling the bridge through pin 1.

The current in the motor winding rises until the voltage across the sensing resistor R2 produces a voltage at the inverting input of the comparator equal to the voltage on the non-inverting input (370 mV). This value is produced by the divider R10/R11 and by the hysteresis determined by R6 and R8. At this point the comparator switches, disabling the bridge. The current in the winding recirculates through D5 and D6 until the voltage across R2 falls below the lower threshold of the comparator. The comparator then switches again and the cycle repeats.

Fig. 9 – A single device can be used to drive a two phase bipolar stepper motor.

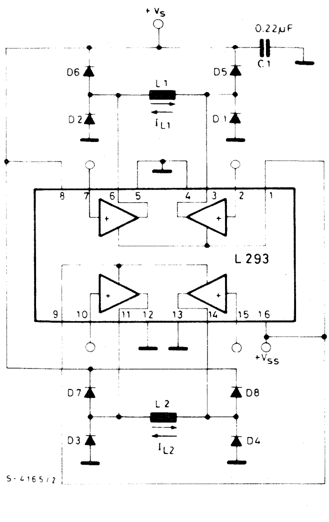

Fig. 10 – Two comparators provide chopper current regulation in this bipolar stepper motor drive circuit.

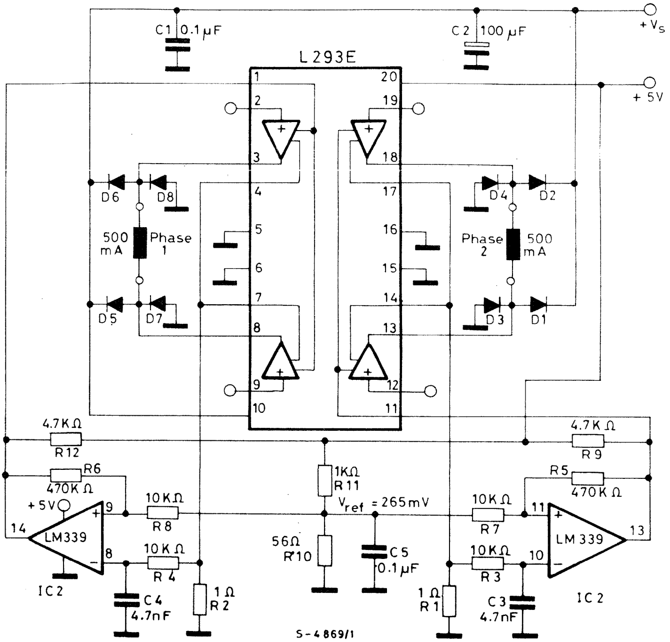

The peak current in each winding is determined by V_{ref} (in this case it is 0.5A) and the switching rate – and hence the average current – depends on the hysteresis of the comparator and R4C4. With the component values shown the switching frequency is roughly 20 kHz.

The figure 10 circuit uses only half of the LM339 quad comparator. With the addition of a few extra passive components we can take advantage of the spare comparators to implement short circuit protection. Figure 11 shows how this is done.

As before, comparators 1 and 2 regulate the current in the windings but in this case the connection is different because the inhibit/enable inputs are used for the short circuit protection. The PWM choppers act on the channel inputs through the four clamp diodes D9, D10, D11 and D12. This is a simple trick which allows us to use the channel inputs both for the step sequencing and the choppers.

Comparators 3 and 4 realize the short circuit protection function. Again looking at phase one, comparator 3 operates as a flip flop. Its output is connected to the bridge enable inputs (pins 1 and 11) and is normally high, enabling the drivers. If the output current (sensed by RS1) reaches double the nominal value the comparator CP3 switches, inhibiting the two bridges.

The comparator remains in this state until the V_{SS} supply (5V) is interrupted. The outputs of comparators 3 and 4 are ORed together so that a short circuit on one phase disables both bridges.

For this circuit V_A should be less than 300 mV (V_A is the voltage on the + input of CP1). From the value chosen for V_A and the desired phase current the sense resistor RS1 (and RS2) is chosen. The current ripple should be at least 30 mA to avoid spurious triggering of CP1 and CP2.

The component values indicated are for a motor with a resistance of 37 Ω/phase, inductance of 80 mH/phase and a current of 280 mA/phase. V_{ref} is 243 mV giving V_A = 274 mV when the output is high and 243 mV when the output is low. Since RS1 = 1Ω the current is the winding reaches 274 mA peak and has a ripple of roughly 30 mA. The switching frequency depends on the hysteresis of the comparators and the motor characteristics. For this example the frequency is about 15 kHz.

Stepper motor drive circuits can be simplified using the L297 stepper motor controller which contains a translator to generate the phase sequences plus a dual PWM chopper to regulate the phase currents.

The L297 connects directly to the L293E or L298 as shown in figure 12. This example drives a bipolar stepper motor with winding currents up to 2.5A. For lower currents an L293E is used and more powerful motors can be driven by two L298s with paralleled bridges, giving up to 3.5A.

In this configuration the motor is controlled through the L297. A step clock moves the motor one increment, the CW/$\overline{\text{CCW}}$ input controls the direction and the HALF/$\overline{\text{FULL}}$ input selects half step or normal operation. The input V_{ref} is connected to a suitable voltage reference and sets the peak winding current in the motor. The choppers in the L297 can operate on the phase lines or the inhibit lines, depending on the state of the logic input called CONTROL.

For a more detailed description of the L297 see "Introducing the L297 Stepper Motor Controller".

Fig. 11 - With a quad comparator both current regulation and short circuit protection can be obtained.

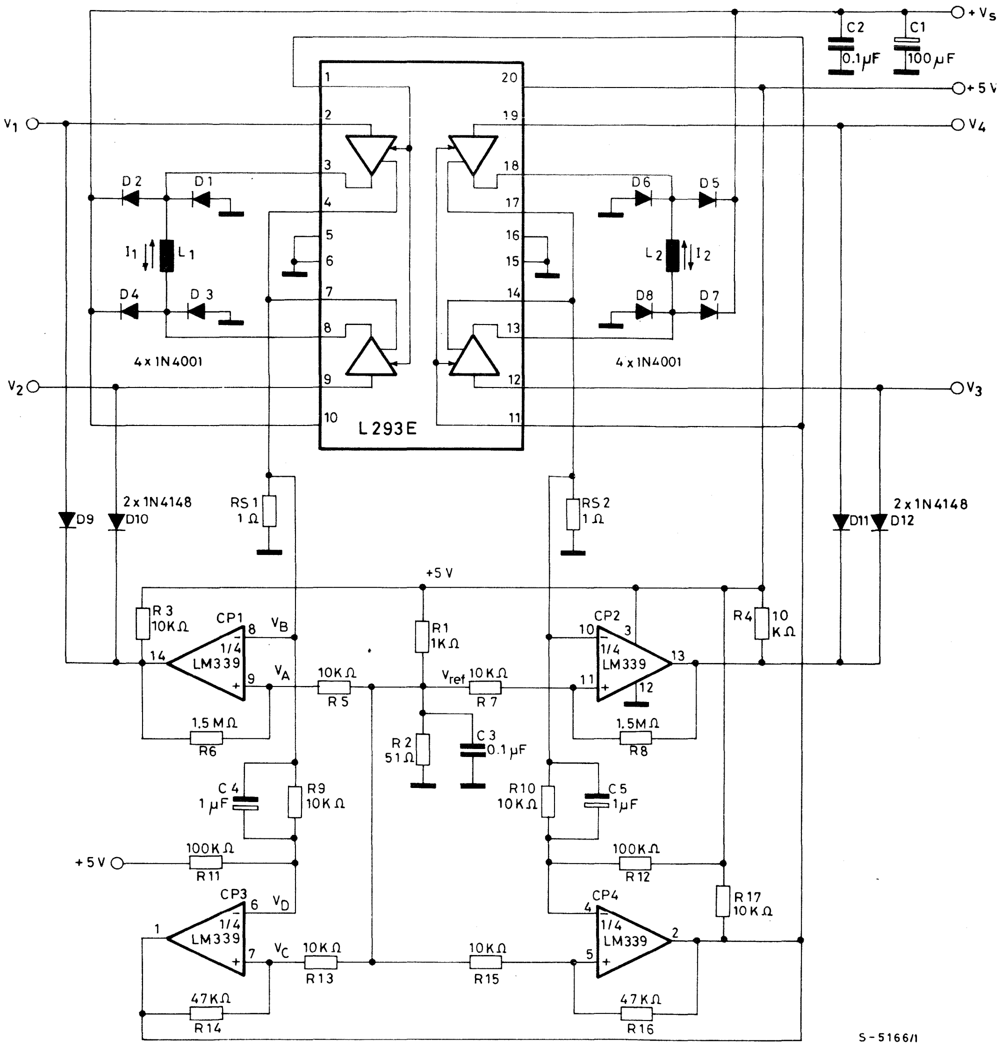

Fig. 12 - An L297 stepper motor controller and a L298 driver together form a complete microprocessor-to-stepper motor interface. This circuit drives bipolar stepper motors with winding currents up to 2A.

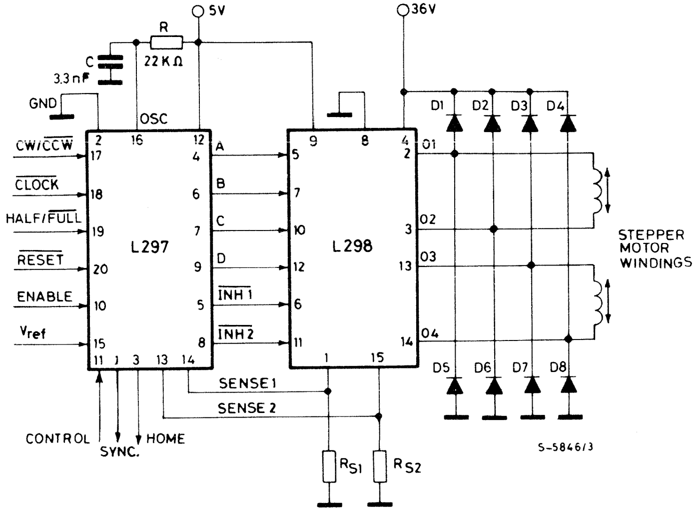

R_{S1} R_{S2} = 0.5Ω

D1 to D8 = 2A Fast Diodes $\left\{ \begin{array}{l} V_F \leqslant 1{,}2V \text{ @ } I = 2A \\ trr \leqslant 200 \text{ ns} \end{array} \right.$

SWITCHMODE DRIVERS FOR SOLENOID DRIVING

This design guide describes the operation and applications of the L294 and L295 switchmode solenoid drivers. Integrating control circuitry and power stage on the same chip, these devices replace complex discrete circuits, bringing space and cost savings.

Many applications, particularly in computer peripherals, require a high power, fast solenoid driver circuit. In the past these circuits have been realised with discrete components because the high powers required precluded the use of monolithic technology.

SGS has overcome this problem with a new high power bipolar technology that uses an innovative implanted isolation technique. This technology is used to fabricate two switchmode solenoid driver chips, the L294 and L295, which both incorporate high power output stages and control circuitry. Both circuits are designed for efficient switchmode operation and are mounted in SGS' Multiwatt ® plastic package.

THE L294 SOLENOID DRIVER

The L294 is designed for solenoid driving applications where both very high speed and high current are essential; needle and hammer driving in printer mechanisms, for example. It delivers 4A with supply voltages up to 46V, handling effective powers up to 180W.

Shown in figure 1, the L294 is controlled by a TTL – level logic input and the peak load current is

Fig. 1 - Internal block diagram of the L294 switchmode solenoid driver.

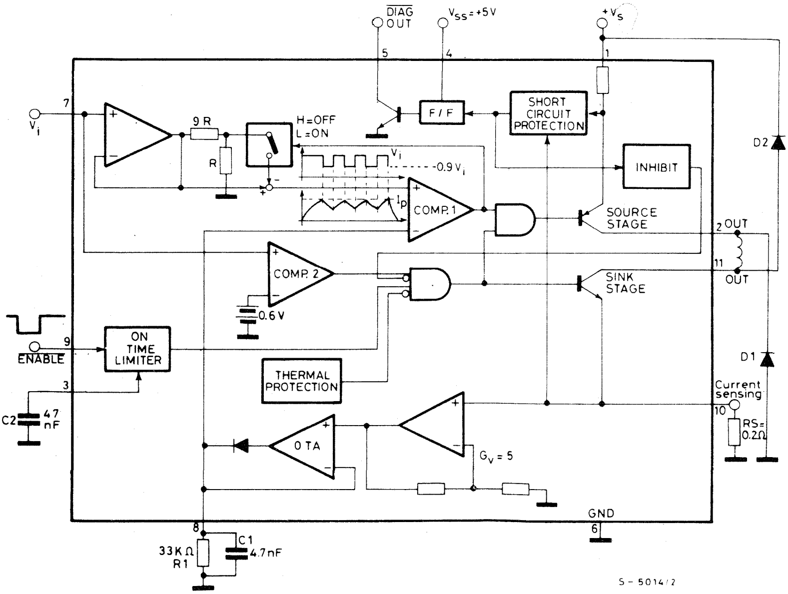

programmed by a reference voltage applied to the pin labelled V_i.

Internal switchmode control circuitry regulates the solenoid current by turning the output stage on and off repeatedly to keep the load current between the programmed peak value, I_p, and a lower limit of 0.9 I_p.

Other features of the L294 include thermal shutdown, output short circuit protection, overdriving protection and a latched diagnostic output. This output indicates fault conditions such as a short circuit solenoid.

CIRCUIT OPERATION

In most applications the L294 is used with a fixed reference voltage (V_i) and the solenoid is controlled by negative-going pulses on the $\overline{\text{ENABLE}}$ input. When the $\overline{\text{ENABLE}}$ input is active (low level), the output stage is enabled and the load current rises as shown in figure 2.

The load current is sensed by an external resistor (R_S) in the emitter of the sink stage. Through the op amp and transconductance amplifier (OTA), the sensed voltage charges an external RC network (R1C1)which determines the switching characteristics of the device.

The voltage across this RC network is compared with the voltage V_i, which fixes the output peak current. When the current has reached the programmed peak value this comparator switches, turning off the output source stage and closing a switch which reduces the voltage on the non-inverting input to 0.9 V_i. The load current now recirculates in D1. The voltage on pin 8 falls with a time constant determined by R1C1 or the load characteristics, whichever is the longest. In other word. R1C1 sets the minimum recirculation time constant.

When the voltage across R1C1 has fallen to the 0.9 V_i threshold the comparator switches on, turning the output stage back on and restoring the V_i comparison threshold.

The output source stage is switched in this way, regulating the load current, until the $\overline{\text{ENABLE}}$ input goes high again. At this point the output stage is disabled — both source and sink — and the load current recirculates through D1 and D2 to ensure a fast decay. By varying the voltage V_i the peak load current can be programmed to any value in the range 0.6A to 4A. This feature can be exploited to implement two-level current control if the fixed reference is replaced by a switched reference as shown in figure 3.

Fig. 2 - Output current waveforms of the L294. The output current in regulated by switching between a peak value, I_p, and a lower limit of 0.9 I_p.

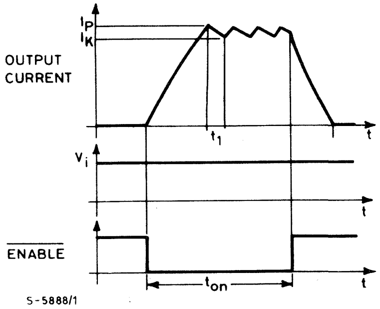

Fig. 3 - Two level current control can be implemented by switching V_i between two values.

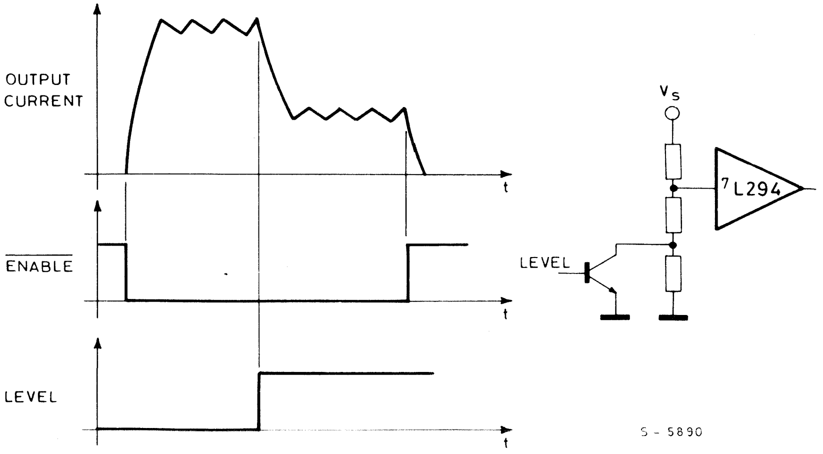

Fig. 4 - On-time limiter waveforms. After a period defined by C2 the output is disabled regardless of the state of ENABLE, protecting against overdriving.

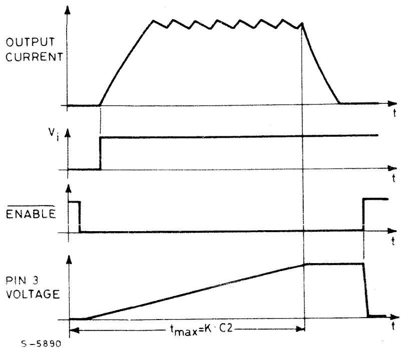

PROTECTION

To protect the load and the L294 from overdriving an on-time limiter inhibits the output stage independently of the $\overline{\text{ENABLE}}$ input if the duration of the input pulse exceeds a period set by the external capacitor C2 (figure 4). This circuit is reset by taking the $\overline{\text{ENABLE}}$ input high. The on-time limiter can be disabled by grounding pin 3.

Protection against overheating is incorporated in the form of a thermal shutdown circuit which disables the output stage when the junction temperature exceeds 150°C. The circuit restarts when the temperature has fallen about 20°C.

The L294 is also protected against short circuits to ground, to supply and across the load. Triggered when the source stage current exceed 5A or the sink stage current exceed $1V/R_S$, the short circuit protection block inhibits the output stage and sets a flip flop which is supplied by a separate supply voltage V_{SS}. This flip flop is connected to the diagnostic output and signals that all is not well — a shorted solenoid, for example. The diagnostic flip flop is reset by removing the supply V_S.
A LED can be connected to the diagnostic output as shown in figure 5. If the diagnostic function is not required the V_{SS} supply can be omitted. The short circuit protection, however, still functions, even without V_{SS}.

Fig. 5 - Standard solenoid driving application of the L294. Pin 7 must be connected to a suitable reference voltage to set the peak current.

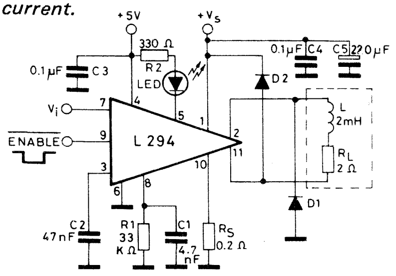

D1 : 3A Fast Diode
D2 : 1A Fast Diode
} trr ⩽ 200ns

USING THE L294

The basic application circuit for the L294 is shown in figure 5; a suggested layout is given in figure 6. The circuit is complete except for the source of V_i. In most cases this will be provided by a simple resistive divider dimensioned to set the desired peak current. With a $0.2\ \Omega$ sense resistor as shown, the L294 has a transconductance of 1A/V for V_i above 600 mV. The device will not work with V_i less than 450 mV and operation is not guaranteed for V_i between 450 mV and 600 mV.

The on-time limiter delay — set by C2 — is approximately 120 000 x C2. Pin 3 must be grounded if the on-time limiter isn't used.

Switching frequency depends partly on the timing network R1C1 and partly on the load characteristics.

Fig. 6 - Suggested printed circuit board layout for the application circuit of figure 5.

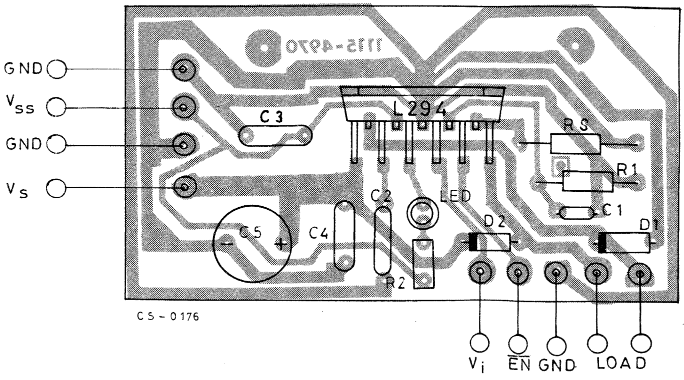

R1C1 determines the minimum value of t_1 (see figure 2), which is given by $t_1 \geqslant 0.1 \times R1C1$. C1 must be in the range 2.7 — 10 nF to ensure stability of the amplifier OTA. R1 must be at least 10 kΩ to give sufficient gain for OTA. The standard application circuit of figure 5 has a switching frequency of about 10 kHz.

The recirculation diodes should be fast types and rated at 3A (D1) and 1A (D2). If the full 4A capability of the L294 is not used these can be reduced.

A high initial peak and low holding current can be obtained with the circuit shown in figure 7a. This example supplies a current peak for about 10 ms.

The peak current, I_{OEX}, (see figure 7a) is found from:

$$I_{OEX} = \frac{V_Z}{5} \cdot \frac{R2}{R_s} \cdot \frac{1}{R1 + R2}$$

V_Z is the zener voltage. The zener and R5 can be omitted if a regulated 5V supply is available for point A.

The holding current, I_{hold}, is found from:

$$I_{hold} = \frac{V_Z}{5} \cdot \frac{(R2 // R4)}{R_S} \cdot \frac{1}{R1 + (R2 // R4)}$$

The duration of the peak is determined by R3C1 and is increased by raising R3 or C1.

Typical component values are listed in the table below:

	I_{OEX}= 4A I_{HOLD}= 1A	I_{OEX}= 2.5A I_{HOLD}= 0.5A
R1	10 kΩ	10 kΩ
R2	47 kΩ	27 kΩ
R3	150 kΩ	150 kΩ
R4	2.7 kΩ	1.5 kΩ
R5	0.2 Ω (1W)	0.27 Ω (0.5W)
D1	3A	1.5A
D2	0.5A	0.5A
C1	0.2 μF	0.2 μF

Fig. 7a - Application circuit for two level current control. This circuit generates a high peak current for a period determined by R3C1 then a lower holding current.

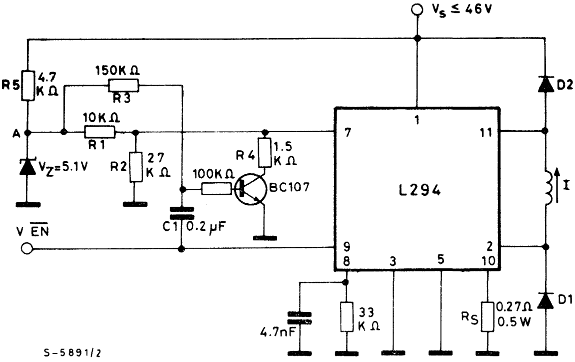

Fig. 7b - Output current waveform obtained with the circuit of fig. 7a.

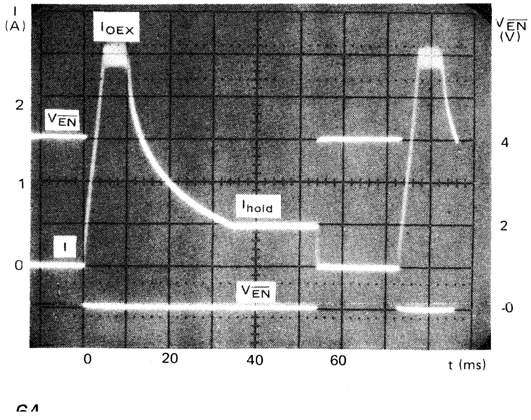

Figura 8 — Pin functions of the L294.

N°	FUNCTION
1	Solenoid supply voltage V_s (12-46V).
2	Output, source stage.
3	On-time limiter time constant. A capacitor to ground sets delay period (120 000 x C2 seconds). On-time limiter is disabled by grounding this pin.
4	Supply input (5V) for diagnostic flip flop.
5	Diagnostic output, open collector. Signals intervention of latched short circuit protection. Reset by removing pin 1 supply.
6	Ground.
7	V_i reference input. Peak output current is proportional to V_i. Transconductance is 1A/V for R_S = 0.2 Ω and $V_i \geqslant$ 600 mV.
8	Timing. A parallel RC network from this pin to ground sets the minimum recirculation time constant. The capacitor must be 2.7-10 nF to ensure stability. The resistor must be greater than 10 kΩ.
9	$\overline{\text{ENABLE}}$. TTL-compatible logic input that controls the solenoid current. The solenoid is driven when this input is at a low level. The on-time limiter overrides enable.
10	Connection for load current sense resistor.
11	Output, sink stage.

THE L295 DUAL SWITCHMODE DRIVER

The L295 is a dual switchmode solenoid driver which handles up to 2.5A per channel at voltages up to 46V — a total effective power handling of 220W. Compared to the L294 it offers a more economical solution when 2.5A is sufficient because there are two drivers per chip. Like the L294 it features switchmode regulation of the output current and thermal shutdown. Additionally it has a separate logic supply input so that the logic can be run at a lower voltage, reducing dissipation.

Intended for inductive load driving, the L295 is particularly suitable for solenoids and stepper motors. One L295 drives two solenoids and two L295s can drive the four phases at a unipolar stepper motor or the two phases of a bipolar stepper motor in bridge configuration.

Each channel of the L295 is controlled by a TTL-level digital input and the peak load current is programmed, independently for each channel, by a voltage reference input. A chip enable input is also provided to disable both channels together.

INSIDE THE L295

Internally the L295 (figure 9) bears little resemblance to the L294. Looking at channel one, when the V_{IN1} input goes high the output transistors Q1 and Q2 are switched on (the enable input $\overline{EN}$ is assumed to be active, i.e. low). The current in the load then rises exponentially, as shown in figure 10, until the voltage across the external sense resistor R_{S1} reaches the current program reference voltage V_{ref1}.

The comparator COMP1 switches and sets the flip flop FF1 which turns off the source transistor Q1. The load current now recirculates through D2-Q2-R_{S1} and decays.

What happens next is determined by the oscillator components R and C on pin 9. If these components are present the flip flop is reset by the next clock pulse before the current decays very far. The output stage is therefore turned on again and the load current rises.

When it reaches the peak value COMP1 switches again, setting the flip flop and disabling the output stage. This process is repeated, regulating the load current until V_{in1} goes low. The output stage is then disabled and the current falls off rapidly, recirculating through D1 and D2 (figure 10).

If the oscillator components are omitted and pin 9 grounded the current simply decays slowly until V_{in1} goes low. The output stage is then disabled and the load current recirculates through D1 and D2. This case is illustrated by the waveforms of figure 11. Note that in this case the peak current level is controlled.

Unlike the L294, the switching frequency of the current regulation loop is determined by the oscillator components R and C (the L294 is also affected by the load). Typically, the switching frequency will be 10-30 kHz. Another difference between the two devices is that the L294 gives a constant ripple, the L295 does not.

TWO LEVEL CONTROL

Since the peak load current is programmed by the reference voltage (for each channel), two level current control can be obtained by switching between two reference voltages. A high V_{ref} is selected initially to give a high initial current peak. Then, after a suitable interval, V_{ref} is reduced to give the lower holding current (figure 12). Two level current control is very useful for solenoids which require a high initial current peak for fast actuation.

Fig. 9 – Internal block diagram of the L295 dual switchmode driver.

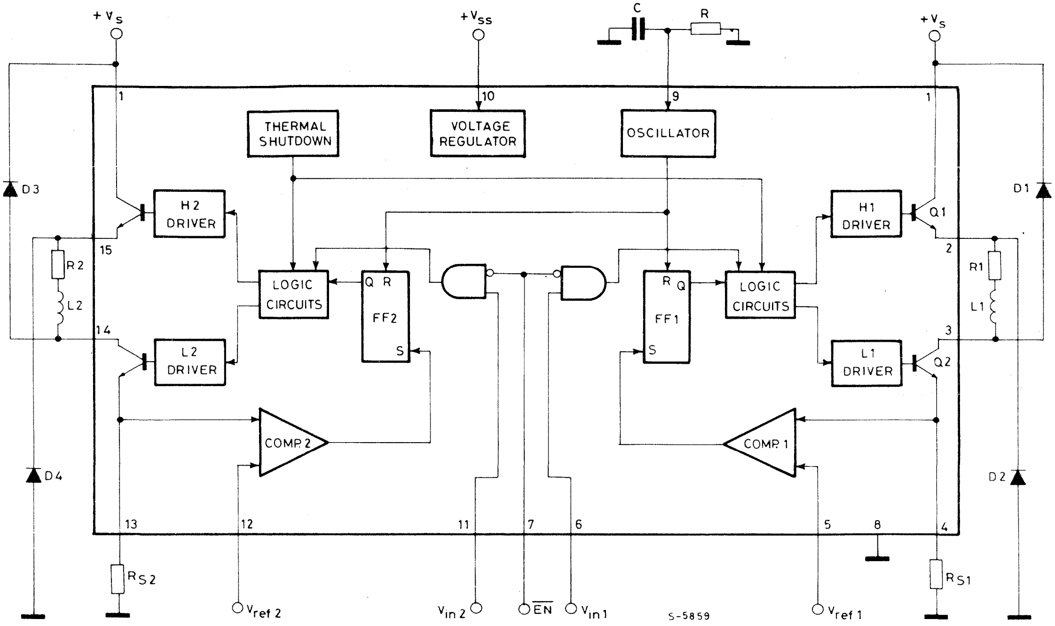

Fig. 10 – Waveforms illustrating normal operation of the L295.

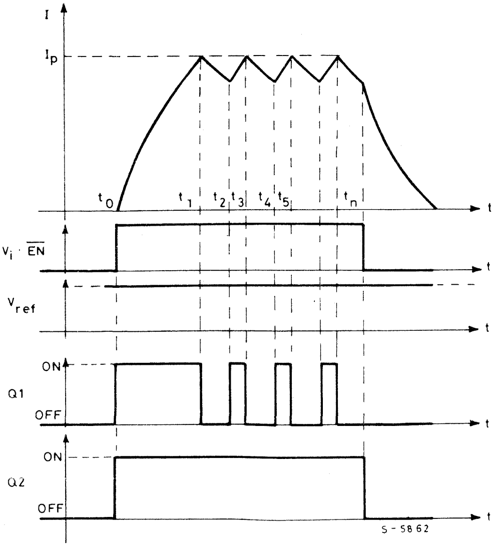

Fig. 11 – When the oscillator components are omitted and pin 9 grounded the L295 delivers a simple current peak to the load.

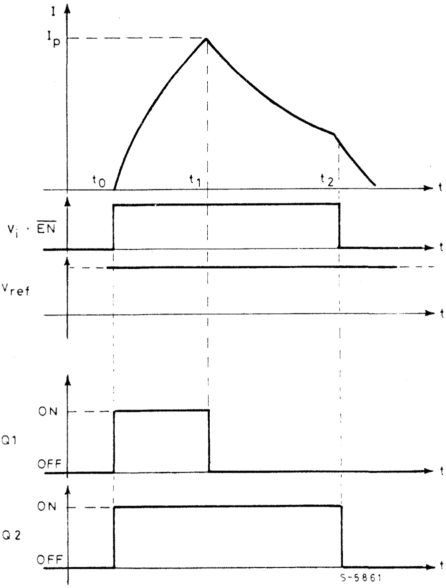

Fig. 12 - Two level current control is obtained by switching V_{ref} between two values.

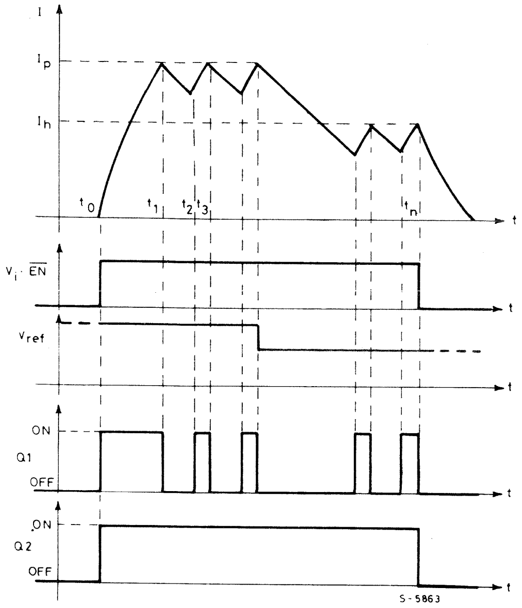

L295 APPLICATION HINTS

The basic application circuit of the L295 is shown in figure 14. A suitable layout is given in figure 15.

Suitable values for the oscillator components, R and C, can be found from the nomogram, figure 16. The value for the reference voltages depends on the desired peak current and is equal to I_pR_s; it must be in the range 0.2V to 2V.
If the V_{ref} inputs are left open circuit the L295 assumes an internal default value of 2.5V giving a peak current of $2.5/R_s$ amperes.

The L295 can also be used to drive unipolar stepper motors. For a four phase motor two devices are used, connected as shown in figure 17. This circuit provides switchmode regulation of the load current with a chopper rate of about 25 kHz. The enable inputs ($\overline{EN}$, connected together) enable/disable the whole circuit and the channel inputs V_{in1} . . . V_{in4} are driven by a suitable translator circuit. Phases 1 and 2 must not be energised together because they share the same sense resistor. The same applies to channels 3 and 4. However, 'two phase on' drive is still possible for bifilar motors where phases one and two represent one winding and 3 & 4 the other, and also for variable reluctance motors with phase 1 adjacent to phase 3 etc.

Two L295s could also be used to drive a bipolar stepper motor in systems where a translator already exists.

Figure 13 - Pin functions of the L295.

N°	FUNCTION
1	Solenoid supply voltage, V_s (12-46V).
2	Channel one output, source stage.
3	Channel one output, sink stage.
4	R_{S1}. Sense resistor connection, channel one.
5	V_{ref1}. A voltage on this pin sets peak current of channel one. If this pin is left open or connected to V_{ss} a default V_{ref} of 2.5V is assumed. An externally applied V_{ref} must be in the range 0.2 to 2V.
6	V_{in1}. Logic input for channel one. Driver is active when V_{in1} is high and $\overline{EN}$ low.
7	$\overline{EN}$. Chip enable (active low). When high both channels are disabled.
8	Ground.
9	Oscillator timing network. This pin is grounded to produce a single peak.
10	V_{SS}. Logic supply voltage, internally regulated. (4.75 - 10V).
11	V_{in2}. Logic input for channel two. Driver is active when V_{in2} is high and EN low.
12	V_{ref2}. Voltage input, controls peak current of channel two. If left open or connected V_s an internal 2.5V reference is assumed. An externally applied V_{ref} must be in the range 0.2 to 2V.
13	R_{S2}. Sense resistor connection, channel two.
14	Channel two output, sink stage.
15	Channel two output, source stage.

Fig. 14 - Typical application circuit of the L295. R1L1 and R2L2 are solenoids.

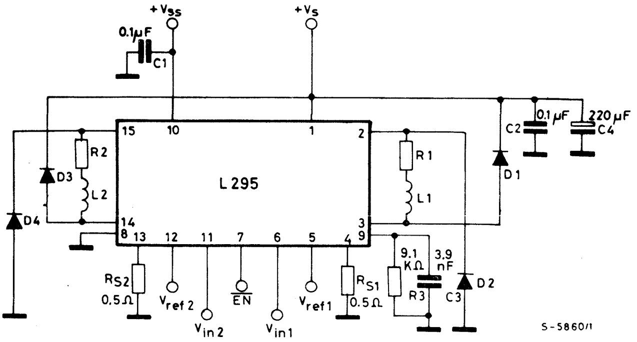

D2, D4 = 2A High speed diodes } trr ⩽ 200ns
D1, D3 = 1A High speed diodes }

Fig. 15 - Suggested printed circuit board layout for the circuit of figure 14.

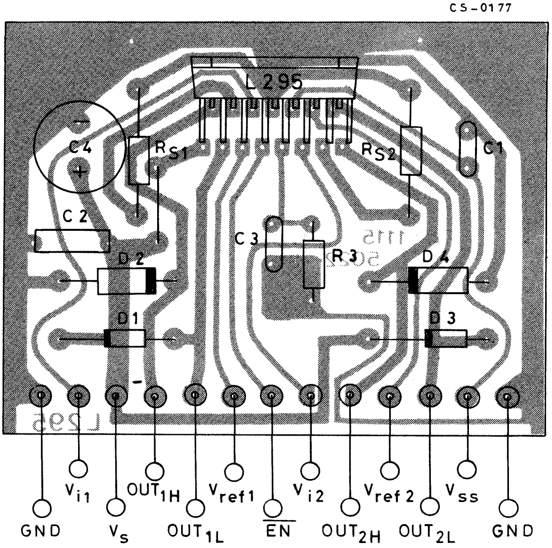

Fig. 16 - Nomogram for the selection of values for the oscillator components, RC.

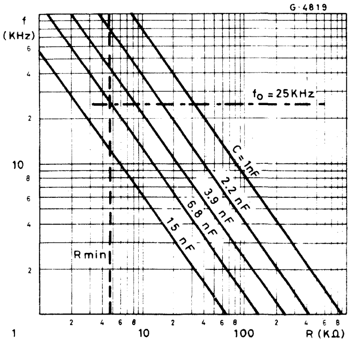

Fig. 17 - Two L295s, connected as shown, can be used to drive a four phase unipolar stepper motor.

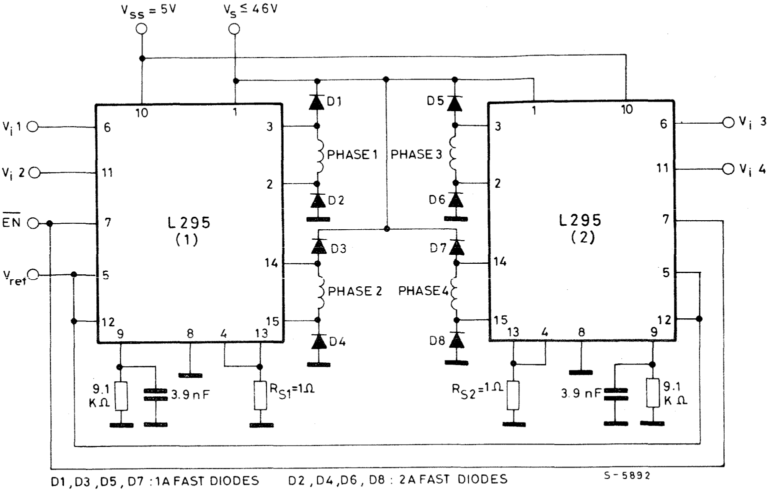

AN INTRODUCTION TO THE L296 POWER SWITCHING REGULATOR

A cost-effective replacement for costly hybrids, the SGS L296 Power Switching Regulator delivers 4A at a voltage from 5.1V to 40V and includes many popular supply features. This note explains how the device operates, presents typical application circuits and offers useful rules for the choice of external components.

Fig. 1 -- A simple, compact reliable and inexpensive 4A switching supply can be built around the L296 Power Switching Regulator. Many of the components shown here can be omitted in simpler configurations.

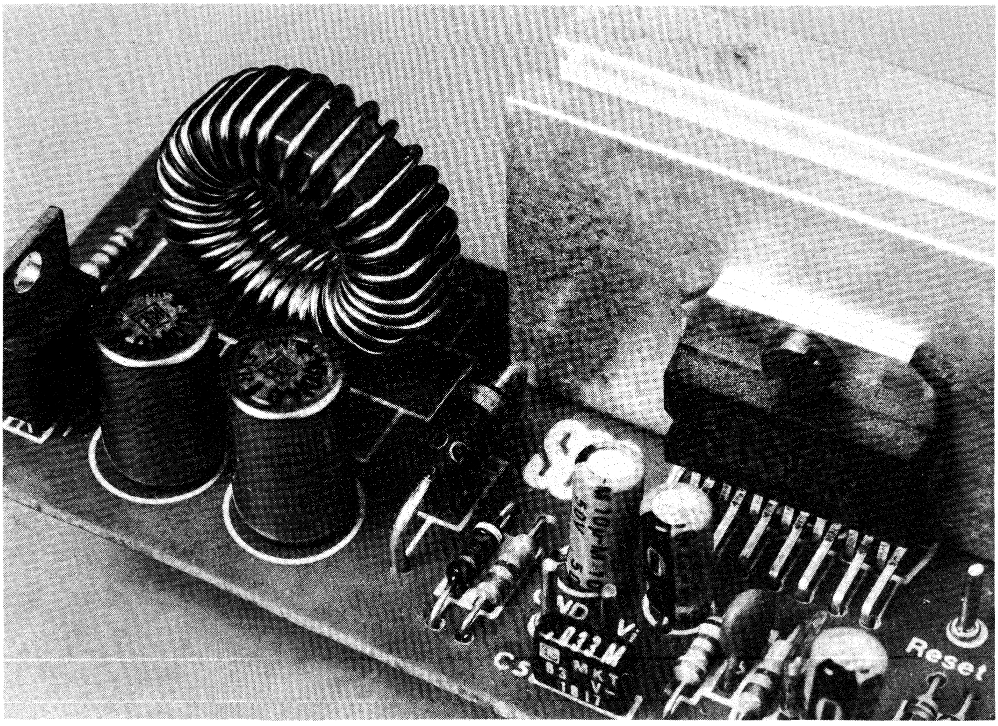

Integrating a full-feature, high-power switching regulator in a single plastic-packaged chip, the SGS L296 Power Switching Regulator offers power supply designers a new alternative to costly hybrids or controller/transistor combinations. Housed in the Multiwatt®-15 power package, it delivers up to 4A at 5.1V to 40V and includes a comprehensive array of support and protection features.

Keeping the application cost to a minimum, the L296 is designed to minimize the cost of external component support without sacrificing performance. To reduce the size and cost of the output LC filter – a determining factor in switching regulators – the L296 is capable of operating efficiently at switching frequencies up to 200 kHz; a special output stage design keeps the switching times to around 100 ns.

Further reduction in cost has been achieved by integrating as much as possible on the chip. All the standard power supply features are included and it even incorporates the load current sense resistor – a 10 mΩ metal track.

Features of the L296 include soft start, programmable current limiting, thermal shutdown, remote inhibit, a reset output for microprocessors and a voltage sense/SCR drive circuit for crowbar overvoltage protection with an external SCR. All of these features are implemented so that components can be omitted in simpler configurations when the function is not needed.

SOFT START slows down the risetime of the output voltage when power is applied, and also when the circuit restarts after an inhibit. It thus eliminates the power-on transients which can damage voltage-sensitive components, or affect their reliability. An external capacitor sets the risetime so that it can be tailored to suit specific requirements.

CURRENT LIMITING protects the L296 from short circuits of the load. Since the limit threshold is adjustable it can also be used to protect the load itself from fault conditions. The limit threshold can be varied from 0.5A to 5A with an external resistor. And if this resistor is omitted, the L296 assumes a limit of 5A, thus protecting itself.

Useful in microprocessor systems, the RESET CIRCUIT provides a logic signal to indicate when the output is above a preset threshold. The reset threshold can be adjusted externally and the reset signal is delayed to prevent false starts.

Coupled to the reset input of a microprocessor, the reset signal inhibits operation whenever the supply is unsafe. It can also be used for applications such as write protection in non-volatile memory.

The OVERVOLTAGE PROTECTION circuit is of the crowbar type and operates with an external SCR connected across the output. It provides direct gate drive for the SCR and has an external voltage sense input so that either the input or output voltage can be monitored.

Fig. 2 – In addition to the basic regulation loop, the L296 includes useful features such as current limiting and a reset circuit which reduce the amount of support circuitry required in typical applications.

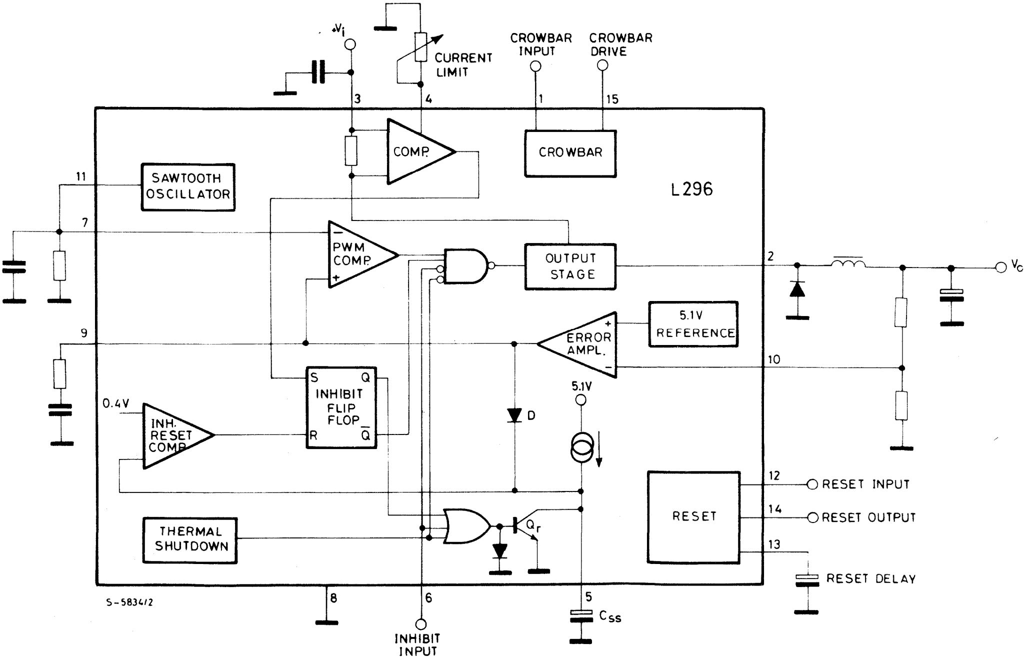

THERMAL SHUTDOWN protects the device in overload conditions by disabling the output stage when the junction temperature exceedes 150°C; it has hysteresis to prevent unstable conditions.

REMOTE INHIBIT is permitted by a TTL-compatible inhibit input which disables the L296. When the inhibit signal is removed the circuit restarts with the normal soft ramp. The inhibit input is useful for both remote control and supply sequencing.

HOW IT WORKS

The L296's main regulation loop can be seen in the simplified block diagram, figure 2, it consists of a 5.1V reference, loop error amplifier, PWM modulator (sawtooth oscillator plus comparator), power stage and an external LC filter.

Voltage feedback from the output is compared with the 5.1V reference in the error amplifier. The output of this amplifier sets the threshold of the PWM comparator and thus controls the duty cycle of the switching pulses. These pulses drive the output stage, producing the desired output voltage with the help of the LC filter. If the output is connected to the feedback point directly the regulated output voltage is 5.1V; a divider is added to the feedback loop to produce higher voltages. The loop gain characteristics can be modified by the external RC network RgCg to give the required stability, ripple rejection at twice the mains frequency and rejection of supply and load variations.

The output of the oscillator is not connected internally to the PWM comparator. This is done deliberately so that several L296s can be synchronized, avoiding intermodulation on the ground plane in multiple supplies.

SOFT START

Soft start is produced by the diode D, an external capacitor C_{SS} and a constant current source. When power is applied, after an inhibit or after the intervention of the current limiter, the voltage across C_{SS} is zero, clamping the error amplifier output to zero via the diode D. The capacitor is charged by the constant current generator, thereby allowing the error amplifier output — and hence the output voltage — to rise (figure 3).

Fig. 3 - When power is applied, or after an inhibit, the L296's output voltage rises slowly under control of the soft start clamp.

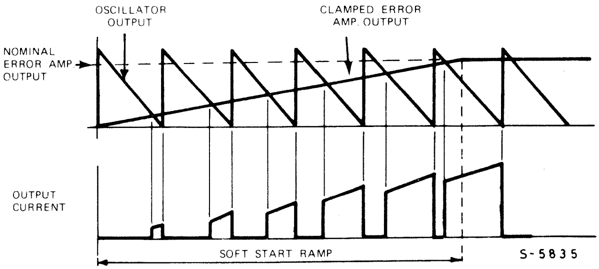

Fig. 4 - The soft start capacitor clamps the output of the L296's error amplifier and is charged by a 100 μA current source.

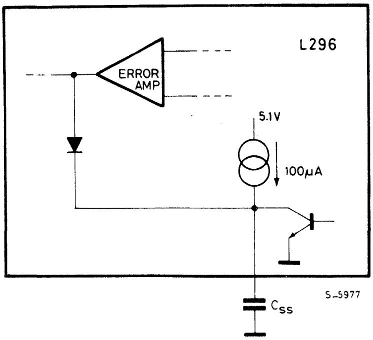

The soft start risetime is set by the capacitor on pin 5. This capacitor must be in the range 1μF to 4.7μF. With the suggested value of 2.2μF the risetime is 100ms; the time for other values is easily calculated bearing in mind that the capacitor is charged by a 100μA source (figure 4).
Note that this capacitor also affects the average current in short circuit conditions.

CURRENT LIMITING

Current limiting is realized with two comparators, a flip-flop, an AND gate, an OR gate and the transistor Qr. The first comparator compares the output current, sensed by an on-chip metal resistor, with the limit threshold preset by an external resistor.

As soon as the current tops the threshold, this comparator switches, setting the flip-flop which disables the output stage and shorts the soft start capacitor via Qr.

A second comparator resets the flip flop when the voltage across C_{SS} has fallen below 0.4V, re-enabling the output stage. With the usual slow ramp, the output current rises again and if the cause of the excess current is still present the whole process is repeated.

This trigger-retry cycle continues until the fault condition is removed (figure 5). Thanks to the dead time and the soft start ramp the average current in this condition is very low.

A resistor connected to pin 4 sets the current limit threshold. If this resistor is omitted and pin 4 left open circuit, the limit threshold is 5A. The threshold can be varied from 0.5A to 4A. For a threshold of 2.5A the resistor is about 33kΩ.

Fig. 5 – Triggered when the output reaches an externally adjustable thereshold,the current limiter operates in continual retry mode until the fault is removed.

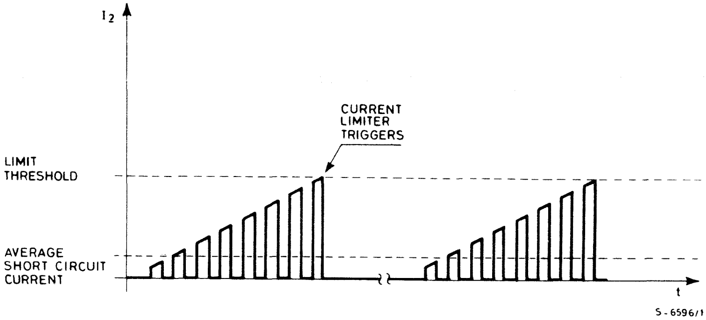

OUTPUT VOLTAGE PROGRAMMING

The output voltage can be varied from 5.1V to 40V and is set by the divider connected between the output and the feedback input.

The divider ratio is given by:

$$\frac{R6}{R7} = \frac{V_o - V_{ref}}{V_{ref}}$$

(V_{ref} is the reference voltage, nominally 5.1V). R7 should not be greater than 51kΩ or the feedback input leakage current will load the divider. For an output voltage of 5.1V the divider is omitted.

INHIBIT INPUT

The inhibit input, pin 6, is TTL, NMOS and CMOS compatible. It disables the L296 when high and must be connected to ground if not used. When the inhibit signal goes from high to low the circuit restarts softly. On the SGS evaluation board this input is tied to ground through a resistor so that the device will operate if no inhibit signal is provided. In real applications this resistor is not needed.

CROWBAR PROTECTION

The crowbar overvoltage protection block has two connections: a voltage sense input and an SCR gate drive output. The SCR is triggered when the voltage on the sense input exceeds the voltage reference by about 20%, i.e. the voltage sense input has a threshold of about 6V.

Normally the sense input is connected directly to the feedback point, pin 10. It can, however, be used to monitor the input voltage,adding a suitable voltage divider to set the threshold.

The gate drive output supplies up to 100 mA and connects directly to the gate of the SCR. The SCR must be able to withstand the peak discharge current of the output capacitor and the short circuit current of the device.

RESET CIRCUIT

The reset circuit has three connections: the reset signal output, the sense input and a connection for the capacitor that sets the delay.

The reset delay capacitor must be in the range 1µF to 4.7µF. A delay of obout 100ms given by the recommended value of 2.2 µF.

The sense input, pin 12, may be connected directly to the feedback point (pin 10) or, with a suitable divider, to the unregulated input (figure 6).

The internal threshold of the reset circuit is V_{ref} - - 100 mV (roughly 5V). Therefore the divider for the second case is found from:

$$\frac{R1 + R2}{R2} = \frac{V_{i\,min}}{V_{ref} - 100\,mV}$$

R2 should not exceed 200 kΩ.

The reset output is open collector and the maximum allowed collector current is 50 mA.

Fig. 6 - The reset circuit's sense input can be connected to the feadback point (a) or to the input via a divider (b) to raise the threshold.

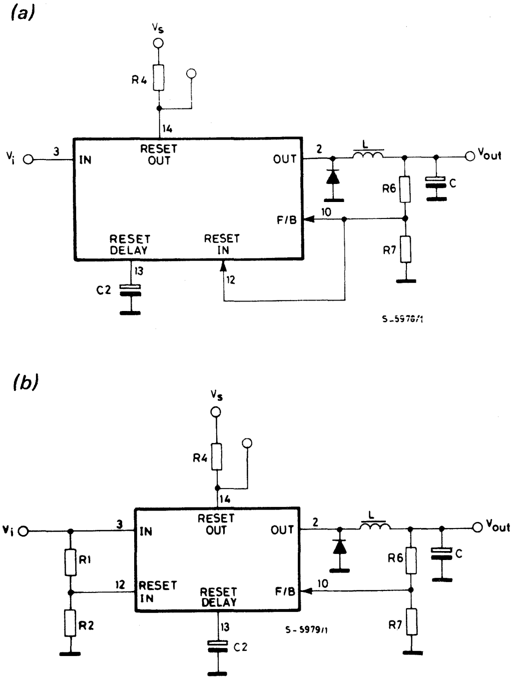

THE LC FILTER

The LC filter converts the pulse output of the L296's power stage into a continuous output voltage with a superimposed ripple, ΔV. The inductor ripple current determines the voltage ripple on the capacitor.

The ripple ΔI_L is generally chosen to be twice the minimum load current to avoid periods when the transistor and diode are both non-conducting.

The formulae used to calculate LC as a function of ΔI_L and ΔV are:

$$L = \frac{V_o\,(V_i - V_o)}{V_i\, f\, \Delta I_L}$$

$$C = \frac{V_o\,(V_i - V_o)}{8 L f^2\, \Delta V}$$

For example, for the test circuit (figure 12) the LC filter was calculated from the following data:

$V_i = 35V$ $V_o = 5V$

$\Delta I_L = 150$ mA $f = 100$ kHz

$\Delta V = 3$ mV

Therefore $L = \dfrac{5\,(35 - 5)}{35\text{x}100\text{x}10^3\text{x}150\text{x}10^{-3}} \cong 300\ \mu H$

and

$$C = \frac{5\,(35 - 5)}{8\text{x}300\text{x}10^{-6}\ \text{x}\ (100\text{x}10^3)^2\,\text{x}30\text{x}10^{-3}} \cong 220\ \mu F$$

In practice the ripple depends on the quality of the filter capacitor. With standard components the ripple will be roughly twice the value implied by this calculation. In this example the actual ripple is about 5 mV.

A multiple capacitor — two or more connected in parallel with a total capacity of C — is recommended. Smaller electrolytics have a lower inductance — important at high frequencies — and handle higher peak currents.

COMPENSATION AND STABILITY

The system is non linear because the output stage operates in switchmode. However, in certain conditions the system can be represented as linear blocks. Delays are introduced by the output stage which can contribute to instability of the system.

When the switching frequency is at least ten times greater than the frequency at which the open loop gain is unity, the system can be approximated to a linear system. The PWM block can then be characterized as a linear block with gain independent of frequency.

Compensating the system with a series RC network on the output of the error amplifier (pin 9), we obtain:

$$Z = \frac{1 + sRC}{sC}$$

Placing the zero introduced by the RC network at the resonance frequency of the LC output filter ($\omega_o = 1/\sqrt{LC}$) we obtain the Bode plot shown in figure 7.

Fig. 7 - Bode plot of the main regulation loop.

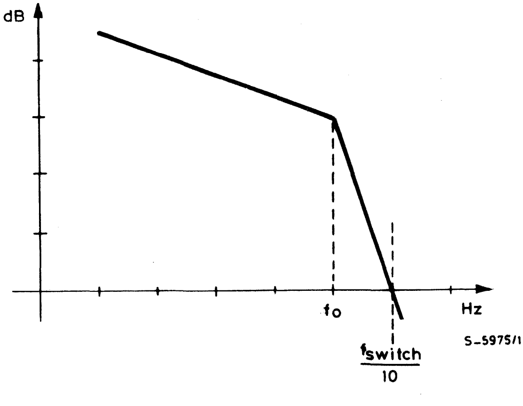

The slope when it crosses the frequency axis at 0 dB is roughly 40 dB/decade. In practice the LC filter contains parasitic elements which give a lower slope.

The series resistance of the capacitor (ESR) introduces a zero at high frequencies, guaranteeing stability of the system.

DIODE

The diode should be a fast type to avoid high current peaks in the output transistor. The choice is therefore between Schottky diodes and fast diodes with a t_{rr} of less than 35 ns.

The only significant difference is the lower forward voltage of Schottky diodes. At low output voltages - around 5V - a Schottky diode therefore improves the efficiency of the system.

SWITCHING FREQUENCY

The choice of switching frequency depends on the inductor chosen (a smaller inductor can be used at higher frequencies), the power dissipation and desired efficiency. It should not exceed 200 kHz or efficiency will be reduced; the lower limit is set only by the maximum acceptable dimensions of the output filter.

The chosen frequency is set by the RC network connected to pins 7 and 11 (OSC and SYNC). Suitable values can be found from the nomogram, figure 8. The capacitor must be in the range 1 nF – 3.3 nF and the resistor in the range 1 kΩ to 100 kΩ.

Fig. 8 - Use this nomogram to choose values for the oscillator components.

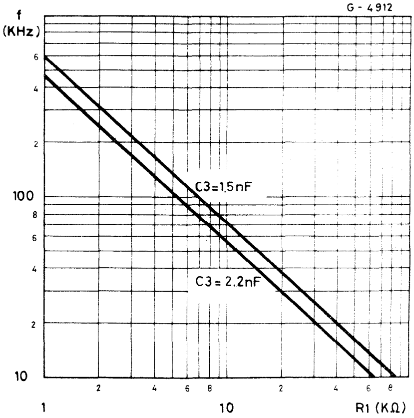

RFI/EMI SUPPRESSION

Electromagnetic interference generated by a high current switching regulator can affect sensitive circuitry. Metal shielding of the regulator is the simple solution. Since the L296 circuit is very compact the board can be housed in the L296's heatsink.

EFFICIENCY

The efficiency of a complete regulator depends on many factors including the switching frequency, the recirculation diode, the input/output differential, and the output current.

In applications where very high efficiency is required, a lower switching frequency must be chosen. Efficiency is also improved by choosing an input voltage not too high.

SYNCHRONISATION

When several L296s are used in a multiple supply the switching frequencies should be synchronised.

This is done by connecting the SYNC pins together and omitting the oscillator components on all but the first device. The OSC pins of the subsequent devices are left open, as shown in figure 9.

Fig. 9 - In multiple supplies several L296s should be synchronized as shown here to avoid intermodulation.

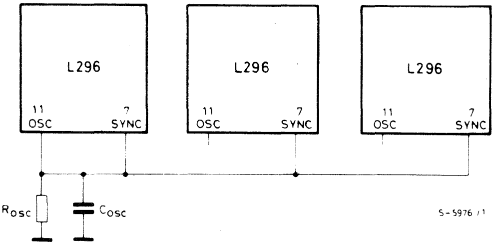

LAYOUT

In view of the high currents (5A peak) and fast switching times involved, care is necessary in the printed circuit layout to avoid problems. In particular, the tracks connecting the L296 output, recirculation diode and LC filter must be short to reduce voltage drop and avoid stray coupling.

It is also important to connect the input filter capacitor, the recirculation diode and output capacitor to the same ground point. A separate ground should be used for the signal processing circuit grounds, connected to the power ground at the negative output terminal.

To guarantee good load regulation the two sensing terminals, pin 8 and 10, should be connected directly to the load as shown in figure 10. The two ten ohm resistors shown in this circuit are necessary to ensure that feedback will still be supplied to the L296 even when the sensing wires are disconnected.

Fig. 10 - When the load is some distance away this four wire connection ensures good regulation.

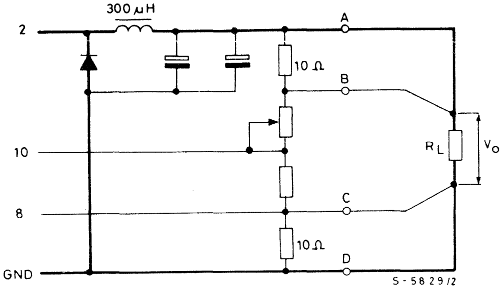

HEATSINK

The choice of heatsink depends on the power dissipated in the device and the desired operating junction temperature. Figure 11 shows the power dissipation derating curves for typical heatsinks.

Silicone grease is often used to improve the contact thermal resistance. The grease should not be too thick or viscous – the thermal resistance may be worsened or the tab deformed.

Care should also be taken when mounting the device on the heatsink. To avoid deforming the tab, which can affect reliability, the mounting screw should be tightened to roughly 8 kg/cm and the heatsink surface should have a planarity no worse than 20 µm. A washer on the screw helps spread the load on the tab and minimize distortion.

Fig. 11 - These durating curves indicate maximum dissipation in L296 with various heatsink types.

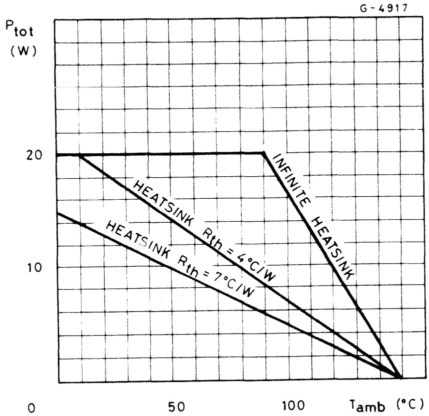

APPLICATION CIRCUITS

The standard evaluation circuit and printed-circuit layout, are shown in figures 12 and 13. This circuit provides a fixed 5.1 to 40V output (set by the divider R7/R8) and uses all the features of the L296. Indications for the choice of component values are summarized in figure 14.

Other application examples are illustrated on the following pages, (figures 15 to 21).

Fig. 12 - This is the evalutation circuit suggested for the L296. All the device's features are exercised. R4 is not strictly necessary.

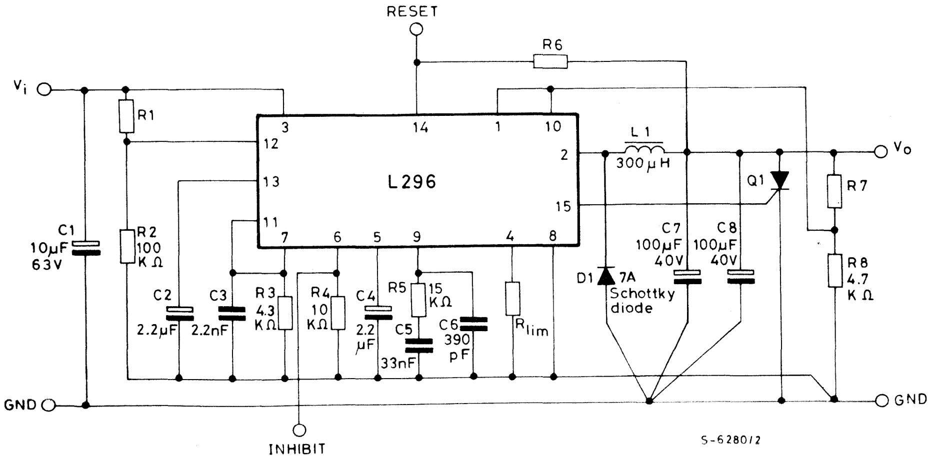

Fig. 13 - Suggested component layout for the figure 12 circuit. Care is needed when laying out circuits of this type or performance can be compromised. (1:1 scale)

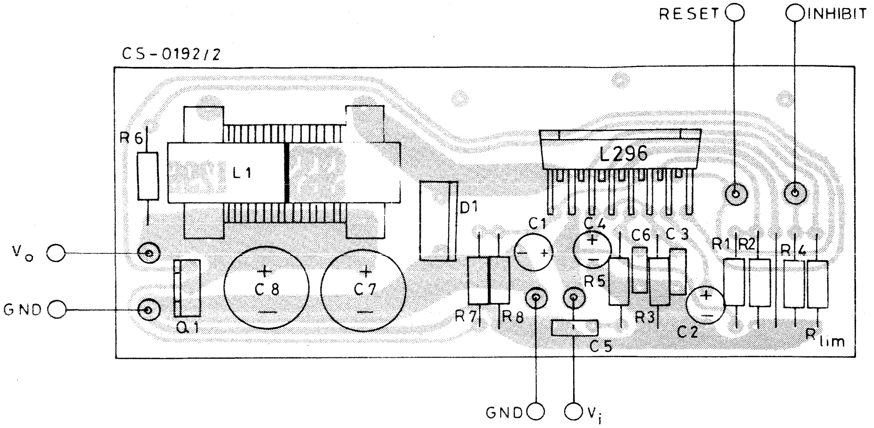

Fig. 14 - These tables indicate the suggested component values and limits for the figure 12 circuit.

Component	Recommended Value	Purpose	Allowed rage		NOTES
			Min	Max	
R1 R2	– 100 kΩ	Set input voltage thereshold for reset.	–	220 kΩ	$R1/R2 = \frac{V_{i\,min}}{5} - 1$ If output voltage is sensed R1 and R2 may be limited and pin 12 connected to pin 10.
R3	4.3 kΩ	Sets switching frequency	1 kΩ	100 kΩ	
R4	10 kΩ	Pull-down resistor		22 kΩ	May be omitted and pin 6 grounded if inhibit not used.
R5	15 kΩ	Frequency compensation	10 kΩ		
R6		Collector load for reset output	$\frac{V_o}{0.05A}$		Omitted if reset function not used.
R7 R8	– 4.7 kΩ	Divider to set output voltage	– –	– 10 kΩ	$R7/R8 = \frac{V_o - V_{ref}}{V_{ref}}$
R_{lim}	–	Sets current limit level			If R_{lim} is omitted and pin 4 left open the current limit is internally fixed.
C1	10 µF	Stability	1 µF		
C2	2.2 µF	Sets reset delay	–	–	Omitted if reset function not used.
C3	2.2 nF	Sets switching frequency	1 nF	3.3 nF	
C4	2.2 µF	Soft start	1 µF	–	Also determines average short circuit current.
C5	33 nF	Frequency compensation			
C6	390 pF	High frequency compensation	–	–	Not required for 5V operation
C7,C8 L1	100 µF 300 µH	Output filter			
Q1		Crowbar protection			The SCR must be able to withstand the peak discharge current of the output capacitor and the short circuit current of the device.
D1		Recirculation diode			7A schottky or high efficiency diode in D0220 package

Suggested Inductor (L1)

Core Type	No Turns	Wire Gauge	Air Gap
Magnetics 58930 - A2MPP	43	1.0 mm.	–
Thomson GUP 20x16x7	50	0.8 mm.	0.7 mm.
Siemens EC 35/17/10 (B6633& - G0500 - X127)	40	2 x 0.8 mm.	–
VOGT 250 µH Toroidal coil, part number 5730501800			

Resistor values for standard output voltages		
V_o	R8	R7
12V	4.7 kΩ	6.2 kΩ
15V	4.7 kΩ	9.1 kΩ
18V	4.7 kΩ	12 kΩ
24V	4.7 kΩ	18 kΩ

Fig. 15 - The fixed divider is replaced by a trimmer in this variable voltage supply. Note the use of separate signal and power grounds.

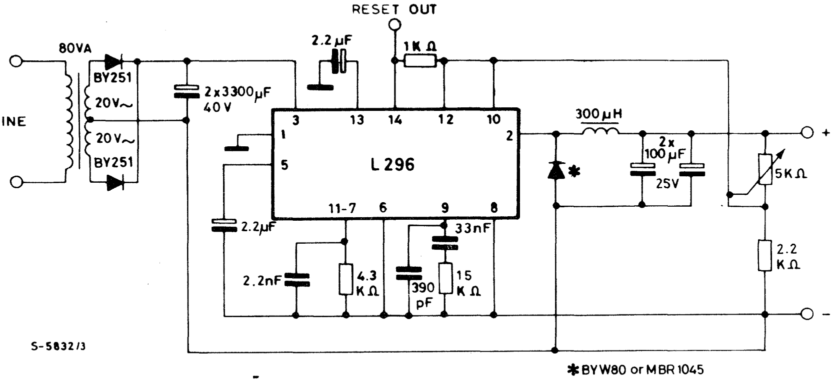

$V_o = $ 5.1 to 15V

$I_o = $ 4A max. (min. load current = 100 mA)

ripple $\leqslant$ 20 mV

load regulation (1A to 4A) = 10 mV ($V_o = $ 5.1V)

line regulation (220V ± 15% and to $I_o = $ 3A) = 15 mV ($V_o = $ 5.1V)

Fig. 16 - A minimal component count 5.1V 4A supply can be obtained when feaures such as reset and crowbar are not needed.

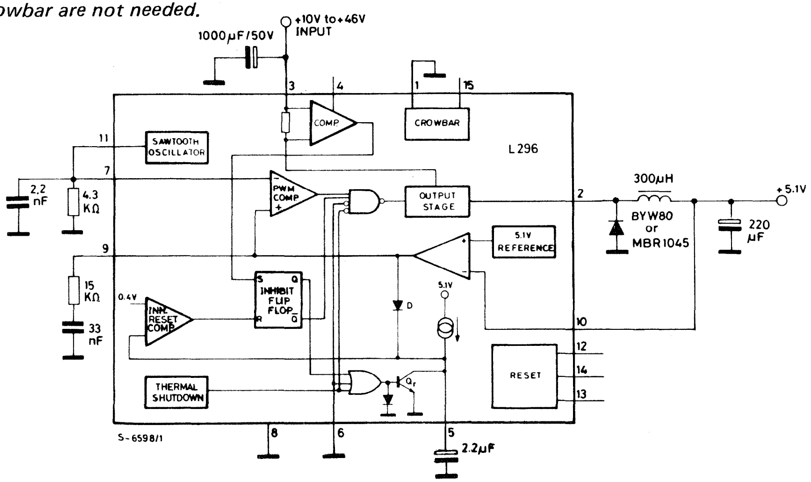

Fig. 17 - The L296's also useful as a preregulator in distributed supply systems. Using very low drop series regulators such as the SGS L4805 the overall efficiency is very high.

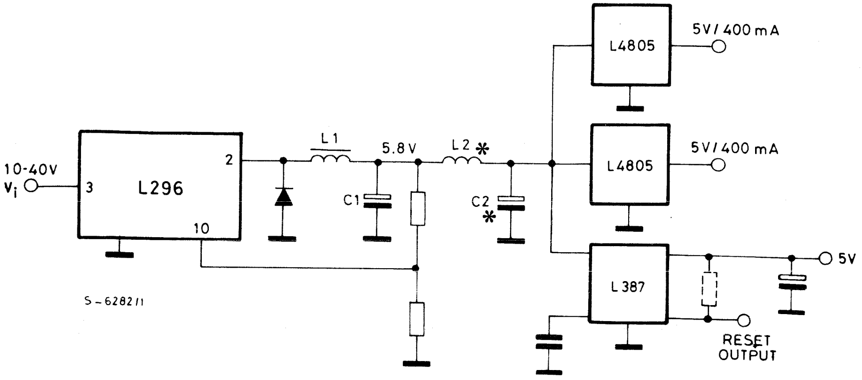

* L2 and C2 are necessary to reduce the switching frequency spikes.

Fig. 18 - Three L296's can be connected to form a 5.1V/15V/24V supply. Note that the three devices are synchronized to avoid intermodulation.

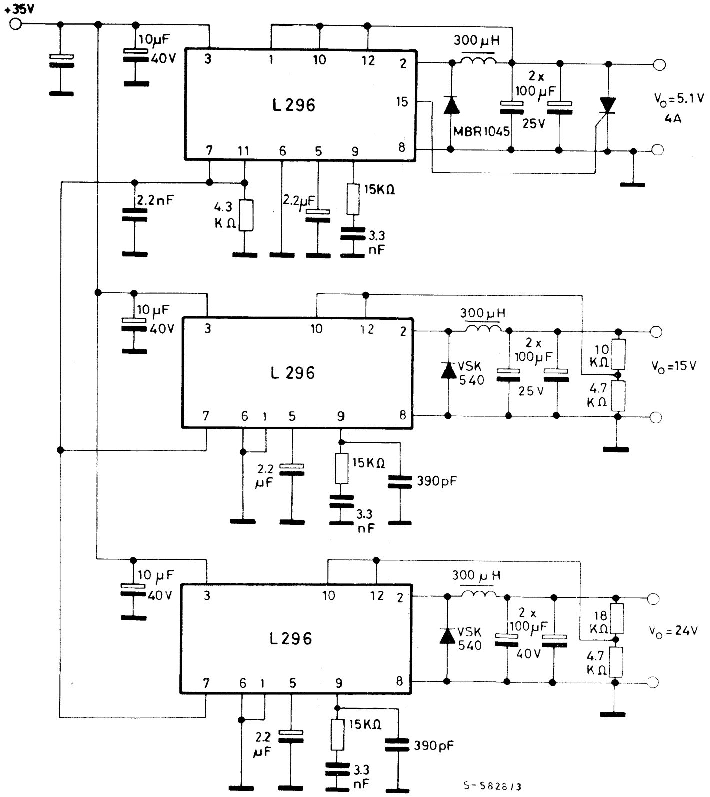

Fig. 19 - Where the L296's 4A output capability is not sufficient an external power transistor can be added as shown in this 12V/10A supply.

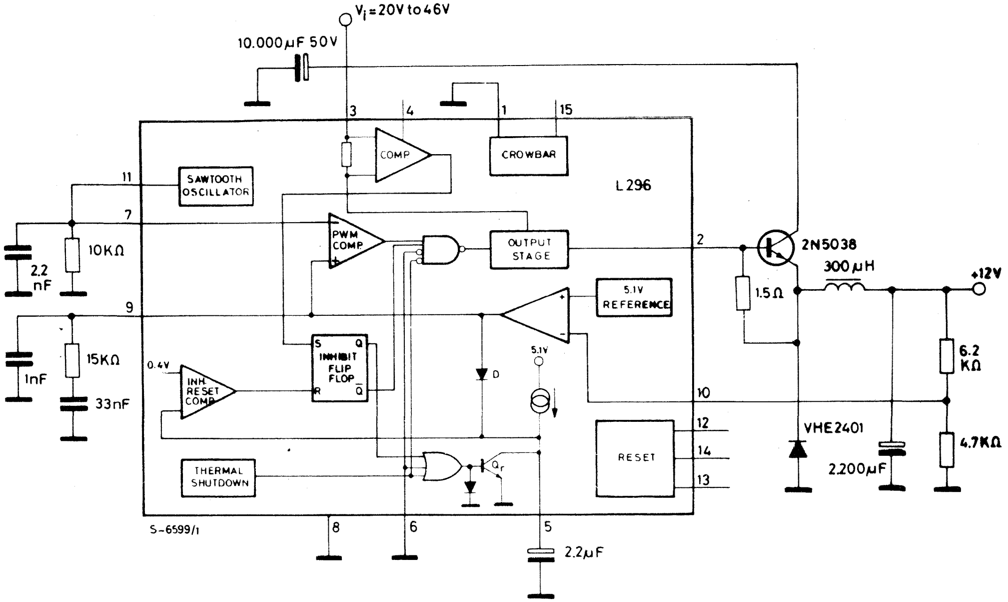

Fig. 20 - Using a transformer in place of the inductor a secondary supply of -12V/100 mA can be produced in addition to the main 5V/4A output.

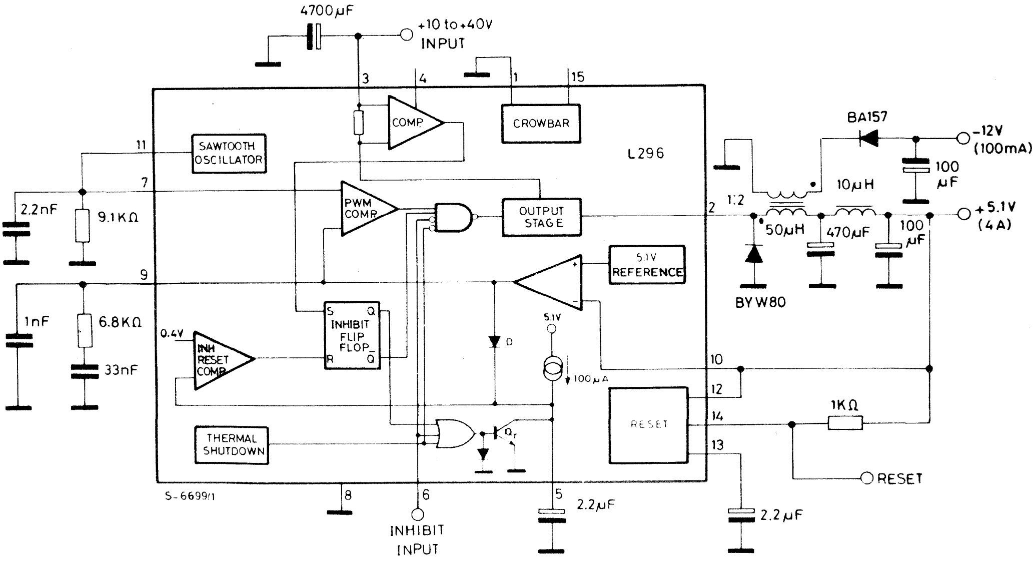

Fig. 21 - An external power MOS transistor is used to produce the step-up configuration shown schematically here.

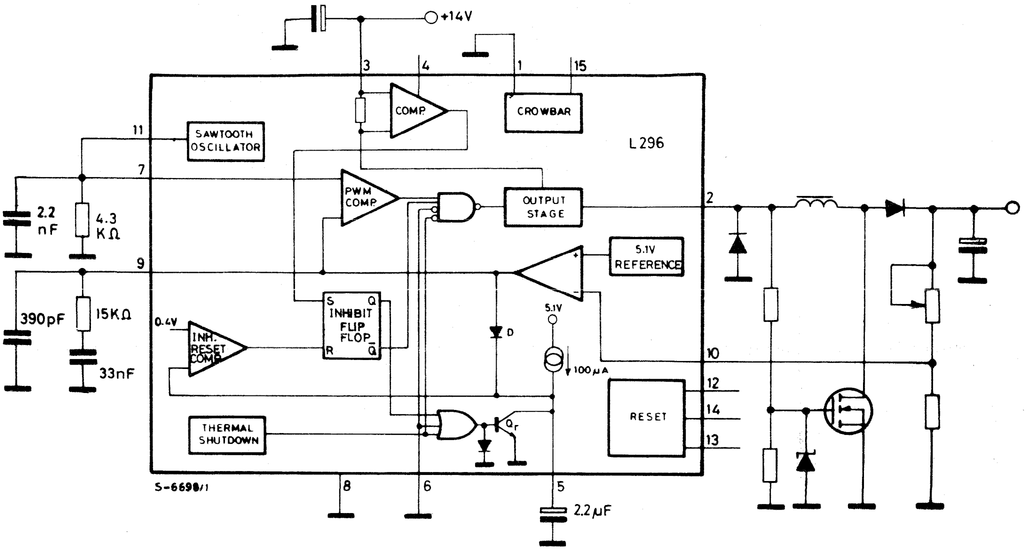

SWITCHING vs LINEAR

Switching regulators are more efficient than linear types so the transformer and heatsink can be smaller and cheaper. But how much can you gain? We can estimate the savings by comparing equivalent linear and switching regulators. For example, suppose that we want a 4A/5V supply.

Linear

For a good linear regulator the minimum dropout will be at least 4V at 4A. The minimum input voltage is given by:

$$V_{i\ min} = V_O + V_{DROP} + \tfrac{1}{2}\ V_{ripple}$$

where $$V_{ripple} \cong \frac{I_O\ \ t1}{C} = \frac{4 x 8 x 10^{-3}}{10 x 10^{-3}} = 3.2V$$

(a good approximation is 8 ms for t_i (at mains frequency of 50 Hz) and 1000 μF for C, the filter capacitor after the bridge).

Therefore $V_{i\ min} \cong$ 10.6V.

Since operation must be guaranteed even when the mains voltage falls 20%, the nominal voltage on load at the terminals of the regulator must be:

$$V_{nom} = \frac{V_{i\ min}}{0.8} = \frac{10.6}{0.8} = 13.25V$$

To allow even a small margin we have to choose:

$$V_{nom} = 14V$$

The power that the series element must dissipate is therefore:

$$P_d = (V_{nom} - V_O)\ I_O = 36W$$

and the transformer must supply a power of:

$$P_{diss} = 14 x 4 = 56W$$

It must therefore be dimensioned for:

$$P_D = \frac{56}{0.9} = 62\ VA$$

and a heatsink will be necessary with a thermal resistance of:

$$R_{th\ heats.} = 0.8°C/W$$

Fig. 22 - Ripple at output of linear regulator.

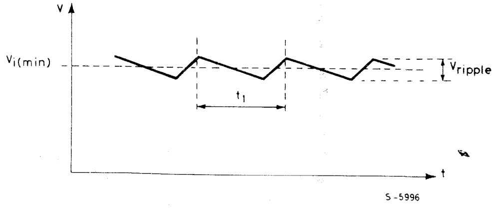

Switching (L296)

Assuming the same nominal voltage (14V), the L296 data sheet indicates that the power dissipated in this case is only 7W. And this power is dissipated in two elements; the L296 itself and the recirculation diode.

It follows that the transformer must be roughly 30 VA and the heatsink thermal resistance about 11°C/W.

	Linear	**Switching**
Transformer	62 VA	30 VA
Heatsink	0.8° C/W	11° C/W

This comparison shows that the L296 switching regulator allows a saving of roughly 50% on the cost of active and passive components is roughly the on the cost of the heatsink. Considering also the extra functions integrated by the L296 the total cost of active and passive components is roughly the same for both types.

If for some reason it is necessary to use higher supply voltages the switching technique, and hence the L296, becomes even more advantageous.

ION-IMPLANTED ISOLATION

The L296 exploits an advanced bipolar process which allows the combination of fast-switching high power devices and dense control circuitry on the same chip. One of the key features of this process is the use of a two-step ion-implantation technique to form the isolation wells.

Normally this isolation is created by diffusing p-type impurities from above. The result is a bowl-like cross section which wastes silicon area (figure 23). Moreover, since prolonged high temperature processing is needed to perform this diffusion, the n+ buried layer spreads, reducing the breakdown voltage.

In the SGS process, a heavy p+ implant is made before, the n^- epitaxial collector growth, followed by a predeposition/drive-in from above. When the wafer is heated the two parts diffuse, joining in the middle to create a narrow isolation well (figure 24). Since high temperature processing is much reduced the n+ buried layer spreads very little and the resulting NPN transistor has a breakdown voltage in excess of 50V.
The narrower isolation results in an increased density, with minimal geometry transistors reduced to a compact 18 mil^2. Speed is correspondingly increased.

Teamed with the Multiwatt ® plastic package, this process allows the integration of complex devices handling in excess of 200W. Other devices already introduced include the L295 dual solenoid driver (220W), the L294 switchmode driver (180W) and the L298 dual bridge driver (200W).

Fig. 23 - In standard bipolar technologies the isolation is diffused from above giving a bowl-shaped cross section which reduces the active silicon area. Also, prolonged high temperature processing causes out-diffusion of the buried layer.

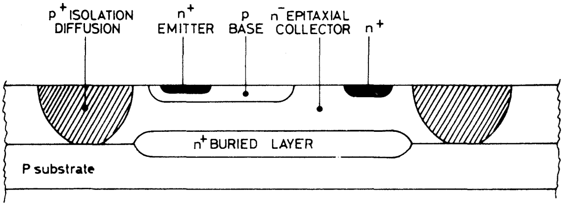

S-6001

Fig. 24 - SGS' above/below ion-implanted isolation is more compact and reults in an increscend n thickness between base and buried layer, raising the breakdown voltage.

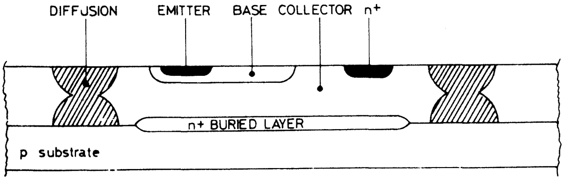

S-6000

INTRODUCING THE L297
STEPPER MOTOR CONTROLLER

The L297 integrates all the control circuitry required to control bipolar and unipolar stepper motors. Used with a dual bridge driver such as the L298 it forms a complete microprocessor-to-bipolar stepper motor interface. Unipolar stepper motors can be driven with an L297 plus a quad darlington array. This note describes the operation of the circuit and shows how it is used.

The L297 Stepper Motor Controller is primarily intended for use with an L298 or L293E bridge driver in stepper motor driving applications.

It receives control signals from the system's controller, usually a microcomputer chip, and provides all the necessary drive signals for the power stage. Additionally, it includes two PWM chopper circuits to regulate the current in the motor windings.

With a suitable power actuator the L297 drives two phase bipolar permanent magnet motors, four phase unipolar permanent magnet motors and four phase variable reluctance motors. Moreover, it handles normal, wave drive and half step drive modes. (This is all explained in the section "Stepper Motor Basics").

Two versions of the device are available: the regular L297 and a special version called L297A. The L297A incorporates a step pulse doubler and is designed specifically for floppy-disk head positioning applications.

ADVANTAGES

The L297 + driver combination has many advantages: very few components are required (so assembly costs are low, reliability high and little space required), software development is simplified and the burden on the micro is reduced. Further, the choice of a two-chip approach gives a high degree of flexibility – the L298 can be used on its own for DC motors and the L297 can be used with any power stage, including discrete power devices (it provides 20 mA drive for this purpose).

Fig. 1 – In this typical configuration an L297 stepper motor controller and L298 dual bridge driver combine to form a complete microprocessor to bipolar stepper motor interface.

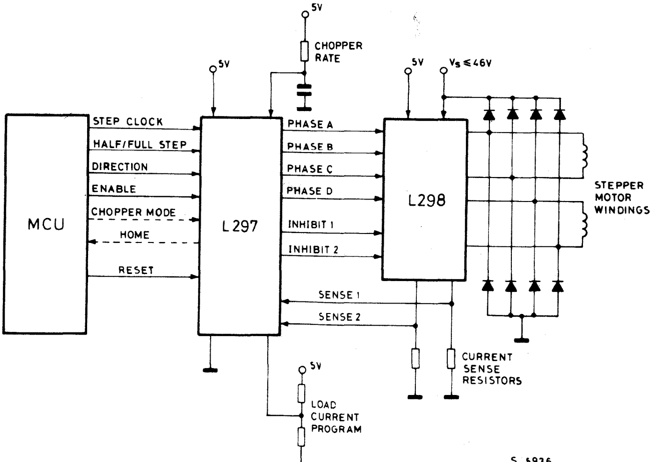

For bipolar motors with winding currents up to 2.5A the L297 should be used with the L298; for winding currents up to 1A the L293E is recommended (the L293 will also be useful if the chopper isn't needed). Higher currents are obtained with power transistors or darlingtons and for unipolar motors a darlington array such as the L7180 is suggested. The block diagram, figure 1, shows a typical system.

Applications of the L297 can be found almost everywhere. . . . printers (carriage position, daisy position, paper feed, ribbon feed), typewriters, plotters, numerically controlled machines, robots, floppy disk drives, electronic sewing machines, cash registers, photocopiers, telex machines, electronic carburetors, telecopiers, photographic equipment, paper tape readers, optical character recognisers, electric valves and so on.

The L297 is made with SGS' analog/digital compatible I^2L technology (like Zodiac) and is assembled in a 20-pin plastic DIP. A 5V supply is used and all signal lines are TTL/CMOS compatible or open collector transistors. High density is one of the key features of the technology so the L297 die is very compact.

THE L298 AND L293E

Since the L297 is normally used with an L298 or L293E bridge driver a brief review of these devices will make the rest of this note easier to follow.

The L298 and L293E contain two bridge driver stages, each controlled by two TTL-level logic inputs and a TTL-level enable input. In addition, the emitter connections of the lower transistors are brought out to external terminals to allow the connection of current sensing resistors (figure 2).

For the L298 SGS' innovative ion-implanted high voltage/high current technology is used, allowing it to handle effective powers up to 200W (46V supply, 2.5A per bridge). A separate 5V logic supply input is provided to reduce dissipation and to allow direct connection to the L297 or other control logic.

In this note the pins of the L298 are labelled with the pin names of the corresponding L297 terminals to avoid unnecessary confusion.

The L298 is supplied in a 15-lead Multiwatt® plastic power package. It's smaller brother, the functionally identical L293E, is packaged in a Powerdip – a copper frame DIP that uses the four center pins to conduct heat to the circuit board copper.

Fig. 2 – The L298 contains two bridge drivers (four push pull stages) each controlled by two logic inputs and an enable input. External emitter connections are provided for current sense resistors. The L293E has external connections for all four emitters.

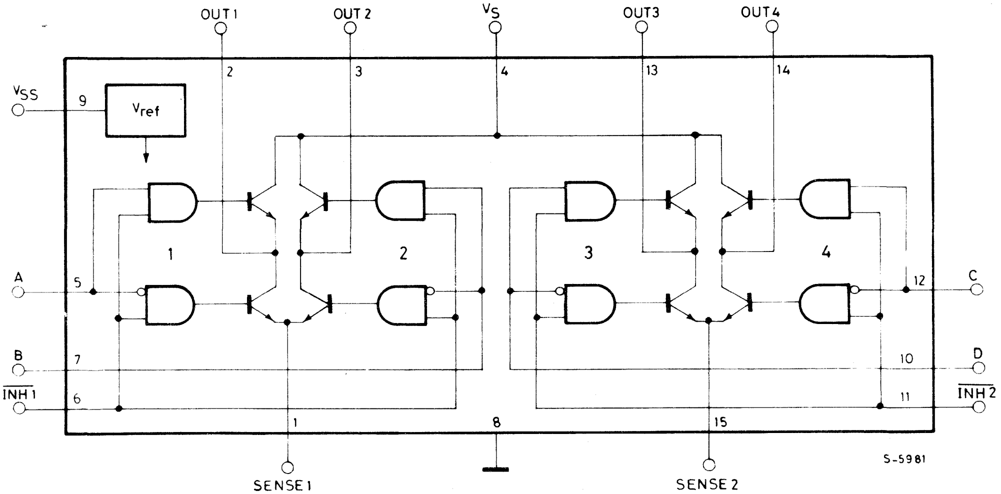

STEPPER MOTOR BASICS

There are two basic types of stepper motor in common use: permanent magnet and variable reluctance. Permanent magnet motors are divided into bipolar and unipolar types.

Bipolar motors

Simplified to the bare essentials, a bipolar permanent magnet motor consists of a rotating permanent magnet surrounded by stator poles carrying the windings (figure 3). Bidirectional drive current is used and the motor is stepped by switching the windings in sequence.

For a motor of this type there are three possible drive sequences.

The first is to energize the windings in the sequence AB/CD/BA/DC (BA means that the winding AB is

Fig. 3 - Greatly simplified, a bipolar permanent magnet stepper motor consist of a rotating magnet surrounded by stator poles as shown.

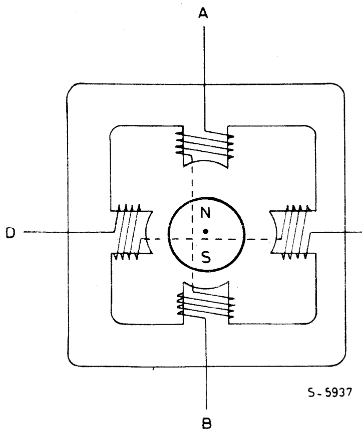

energized but in the opposite sense). This sequence is known as "one phase on" full step or wave drive mode. Only one phase is energized at any given moment (figure 4a).

The second possibility is to energize both phases together, so that the rotor always aligns itself between two pole positions. Called "two-phase-on" full step, this mode is the normal drive sequence for a bipolar motor and gives the highest torque (figure 4b).

The third option is to energize one phase, then two, then one, etc., so that the motor moves in half step increments. This sequence, known as half step mode, halves the effective step angle of the motor but gives a less regular torque (figure 4c).

For rotation in the opposite direction (counterclockwise) the same three sequences are used, except of course that the order is reversed.

As shown in these diagrams the motor would have a step angle of 90°. Real motors have multiple poles to reduce the step angle to a few degrees but the number of windings and the drive sequences are unchanged. A typical bipolar stepper motor is shown in figure 5.

Fig. 4 - The three drive sequences for a two phase bipolar stepper motor. Clockwise rotation is shown.

Fig. 4a - Wave drive (one phase on)

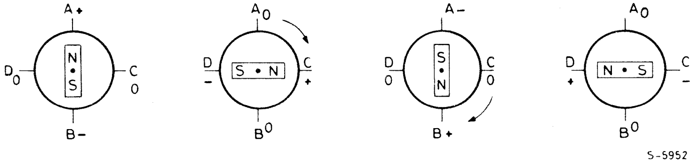

Fig. 4b - Two phase on drive

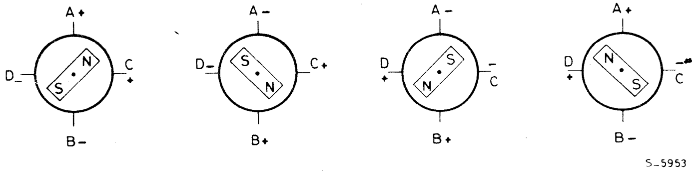

Fig. 4c - Half step drive

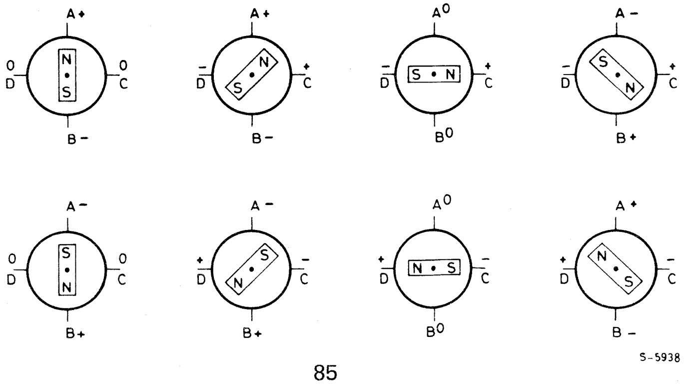

Fig. 5 - A real motor. Multiple poles are normally employed to reduce the step angle to a practical value. The principle of operation and drive sequences remain the same.

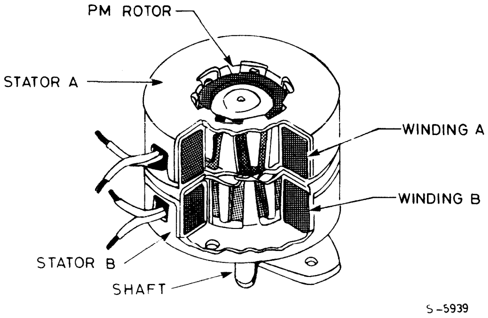

Unipolar motors

A unipolar permanent magnet motor is identical to the bipolar machine described above except that bifilar windings are used to reverse the stator flux, rather than bidirectional drive (figure 6).

This motor is driven in exactly the same way as a bipolar motor except that the bridge drivers are replaced by simple unipolar stages — four darlingtons or a quad darlington array. Clearly, unipolar motors are more expensive because thay have twice as many windings. Moreover, unipolar motors give less torque for a given motor size because the windings are made with thinner wire. In the past unipolar motors were attractive to designers because they simplify the driver stage. Now that monolithic push pull drivers like the L298 are available bipolar motors are becoming more popular.

All permanent magnet motors suffer from the counter EMF generated by the rotor, which limits the rotation speed. When very high slewing speeds are necessary a variable reluctance motor is used.

Fig. 6 - A unipolar PM motor uses bifilar windings to reverse the flux in each phase.

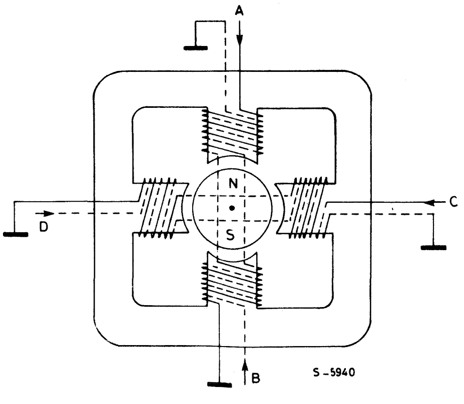

Variable reluctance motors

A variable reluctance motor has a non-magnetized soft iron rotor with fewer poles than the stator (figure 7). Unipolar drive is used and the motor is stepped by energizing stator pole pairs to align the rotor with the pole pieces of the energized winding.

Once again three different phase sequences can be used. The wave drive sequence is A/C/B/D; two-phase-on is AC/CB/BD/DA and the half step sequence is A/AC/C/BC/B/BD/D/DA. Note that the step angle for the motor shown above is 15°C, not 45°.

As before, practical motors normally employ multiple poles to give a much smaller step angle. This does not, however, affect the principle of operation or the drive sequences.

Fig. 7 - A variable reluctance motor has a soft iron rotor with fewer poles than the stator. The step angle is 15° for this motor.

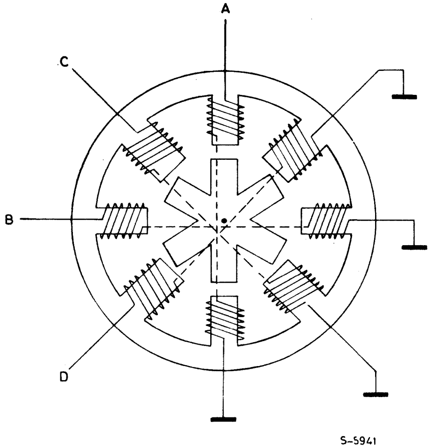

GENERATING THE PHASE SEQUENCES

The heart of the L297 block diagram, figure 8, is a block called the translator which generates suitable phase sequences for half step, one-phase-on full step and two-phase-on full step operation. This block is controlled by two mode inputs — direction (CW/$\overline{\text{CCW}}$) and HALF/$\overline{\text{FULL}}$ — and a step clock which advances the translator from one step to the next.

Four outputs are provided by the translator for subsequent processing by the output logic block which implements the inhibit and chopper functions.

Internally the translator consists of a 3-bit counter plus some combinational logic which generates a basic eight-step gray code sequence as shown in figure 9. All three drive sequences can be generated easily from this master sequence. This state sequence corresponds directly to half step mode, selected by a high level on the HALF/$\overline{\text{FULL}}$ input.

The output waveforms for this sequence are shown in figure 10.

Note that two other signals, $\overline{\text{INH1}}$ and $\overline{\text{INH2}}$ are generated in this sequence. The purpose of these signals is explained a little further on.

The full step modes are both obtained by skipping alternate states in the eight-step sequence. What happens is that the step clock bypasses the first stage of the 3-bit counter in the translator. The least significant bit of this counter is not affected therefore the sequence generated depends on the state of the translator when full step mode is selected (the HALF/$\overline{\text{FULL}}$ input brought low).

If full step mode is selected when the translator is at any odd-numbered state we get the two-phase-on full step sequence shown in figure 11.

By contrast, one-phase-on full step mode is obtained by selecting full step mode when the translator is at an even-numbered state (figure 12).

Fig. 8 - The L297 contains translator (phase sequence generator), a dual PWM chopper and output control logic.

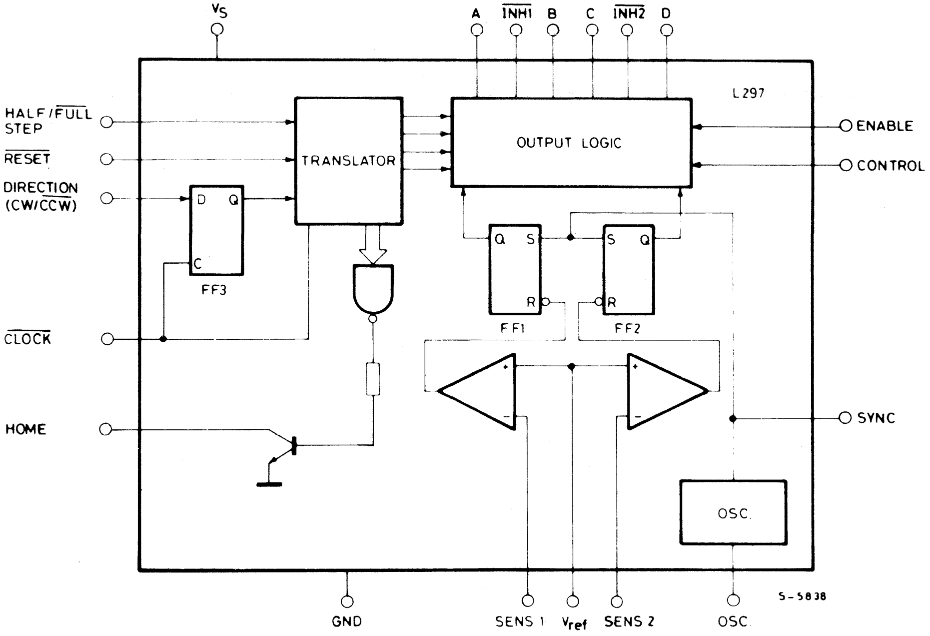

Fig. 9 - The eight step master sequence of the translator. This corresponds to half step mode. Clockwise rotation is indicated.

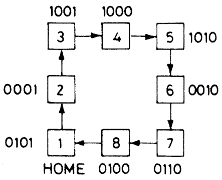

Fig. 10 - The output waveforms corresponding to the half step sequence. The chopper action in not shown.

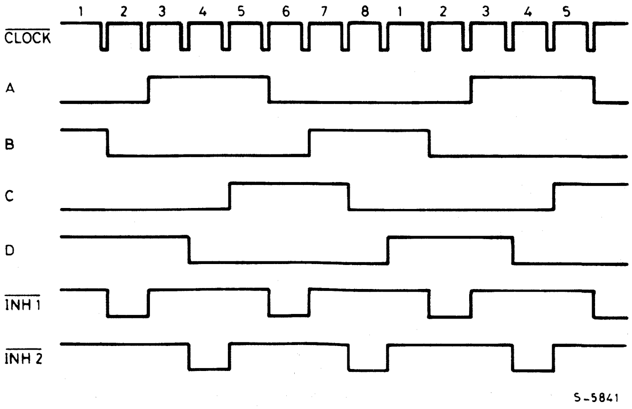

Fig. 11 – State sequence and output waveforms for the two phase on sequence. $\overline{\text{INH1}}$ and $\overline{\text{INH2}}$ remain high throughout.

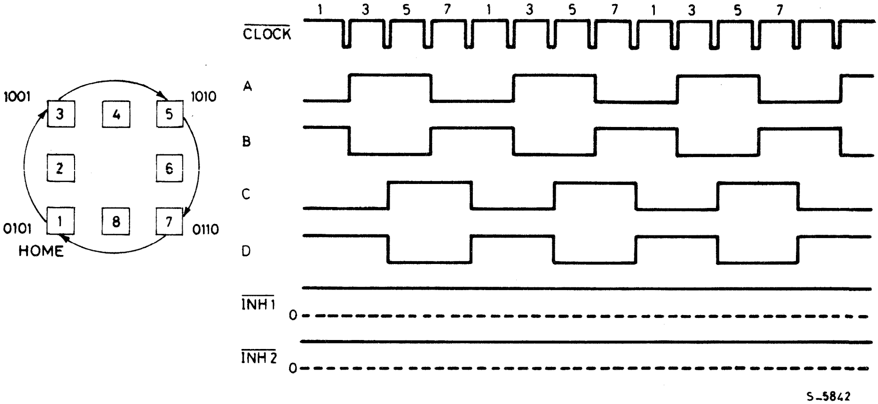

Fig. 12 – State sequence and output waveforms for wave drive (one phase on).

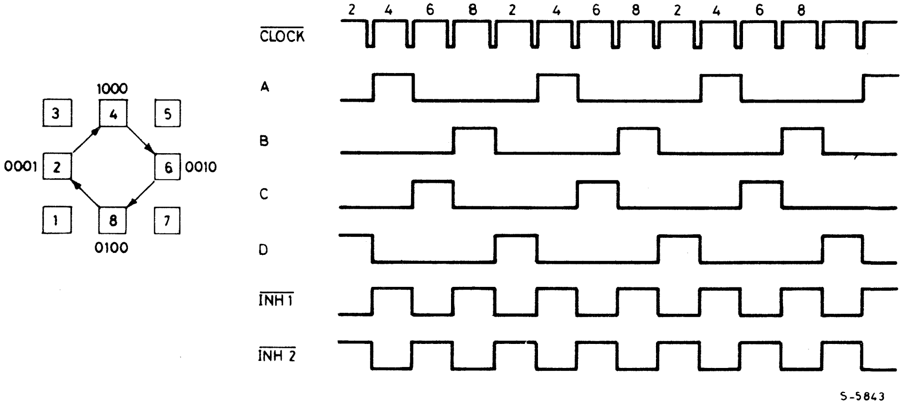

$\overline{\text{INH1}}$ AND $\overline{\text{INH2}}$

In half step and one-phase-on full step modes two other signals are generated: $\overline{\text{INH1}}$ and $\overline{\text{INH2}}$. These are inhibit signals which are coupled to the L298's enable inputs and serve to speed the current decay when a winding is switched off.

Since both windings are energized continuously in two-phase-on full step mode no winding is ever switched off and these signals are not generated.

To see what these signals do let's look at one half of the L298 connected to the first phase of a two-phase bipolar motor (figure 13). Remember that the L298's A and B inputs determine which transistor in each push pull pair will be on. $\overline{\text{INH1}}$, on the other hand, turns off all four transistors.

Assume that A is high, B low and current flowing through Q1, Q4 and the motor winding. If A is now brought low the current would recirculate through D2, Q4 and R_S, giving a slow decay and increased dissipation in R_S. If, on the other hand, A is brought low and $\overline{\text{INH1}}$ is activated, all four transistors are turned off. The current recirculates in this case from ground to V_S via D2 and D3, giving a faster decay thus allowing faster operation of the motor. Also, since the recirculation current does not flow through R_S, a less expensive resistor can be used.

Exactly the same thing happens with the second winding, the other half of the L298 and the signals C, D and $\overline{\text{INH2}}$.

The $\overline{\text{INH1}}$ and $\overline{\text{INH2}}$ signals are generated by OR functions:

$$A + B = \overline{\text{INH1}} \qquad C + D = \overline{\text{INH2}}$$

However, the output logic is more complex because the inhibit lines are also used by the chopper, as we will see further on.

Fig. 13 – When a winding is switched off the inhibit input is activated to speed current decay. If this were not done the current would recirculate through D2 and Q4 in this example. Dissipation in R_s is also reduced.

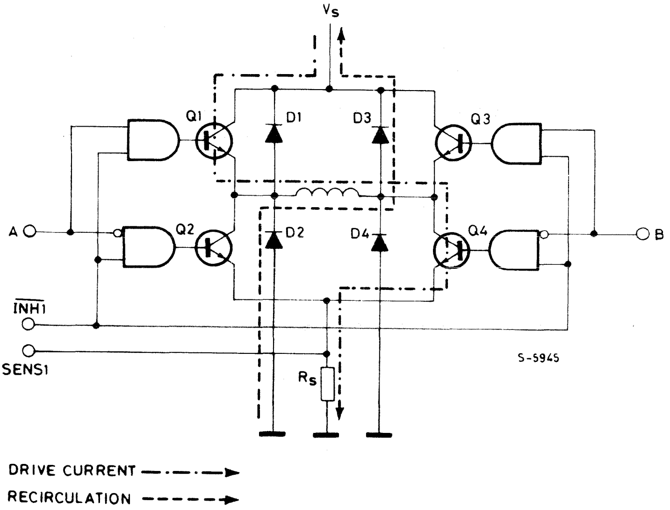

OTHER SIGNALS

Two other signals are connected to the translator block: the RESET input and the HOME output.

RESET is an asynchronous reset input which restores the translator block to the home position (state 1, ABCD = 0101). The HOME output (open collector) signals this condition and is intended to be ANDed with the output of a mechanical home position sensor.

Finally, there is an ENABLE input connected to the output logic. A low level on this input brings $\overline{INH1}$, $\overline{INH2}$, A, B, C and D low. This input is useful to disable the motor driver when the system is initialized.

LOAD CURRENT REGULATION

Some form of load current control is essential to obtain good speed and torque characteristics. There are several ways in which this can be done – switching the supply between two voltages, pulse rate modulation chopping or pulse width modulation chopping.

The L297 provides load current control in the form of two PWM choppers, one for each phase of a bipolar motor or one for each pair of windings for a unipolar motor. (In a unipolar motor the A and B windings are never energized together so thay can share a chopper; the same applies to C and D).

Each chopper consists of a comparator, a flip flop and an external sensing resistor. A common on-chip oscillator supplies pulses at the chopper rate to both choppers.

In each chopper (figure 14) the flip flop is set by each pulse from the oscillator, enabling the output and allowing the load current to increase. As it increases the voltage across the sensing resistor increases, and when this voltage reaches V_{ref} the flip flop is reset, disabling the output until the next oscillator pulse arrives. The output of this circuit (the flip flop's Q output) is therefore a constant rate PWM signal. Note that V_{ref} determines the peak load current.

Fig. 14 – Each chopper circuit consists of a comparator, flip flop and external sense resistor. A common oscillator clocks both circuits.

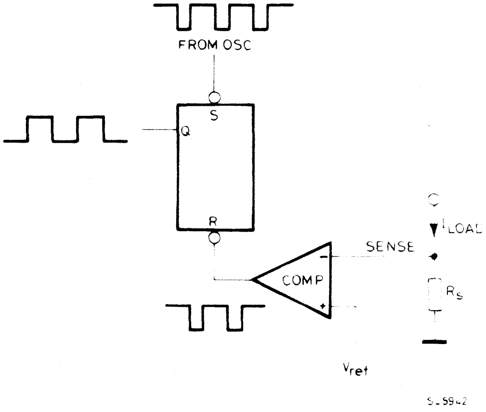

PHASE CHOPPING AND INHIBIT CHOPPING

The chopper can act on either the phase lines (ABCD) or on the inhibit lines $\overline{INH1}$ and $\overline{INH2}$. An input named CONTROL decides which. Inhibit chopping is used for unipolar motors but you can choose between phase chopping and inhibit chopping for bipolar motors. The reasons for this choice are best explained with another example.

First let's examine the situation when the phase lines are chopped.

As before, we are driving a two phase bipolar motor and A is high, B low (figure 15). Current therefore flows through Q1, winding, Q4 and R_S. When the voltage across R_S reaches V_{ref} the chopper brings B high to switch off the winding.-

Fig. 15 - Phase chopping. In this example the current X is interrupted by activating B, giving the recirculation path Y. The alternative, de-activating A, would give the recirculation path Z, increasing dissipation in R_S.

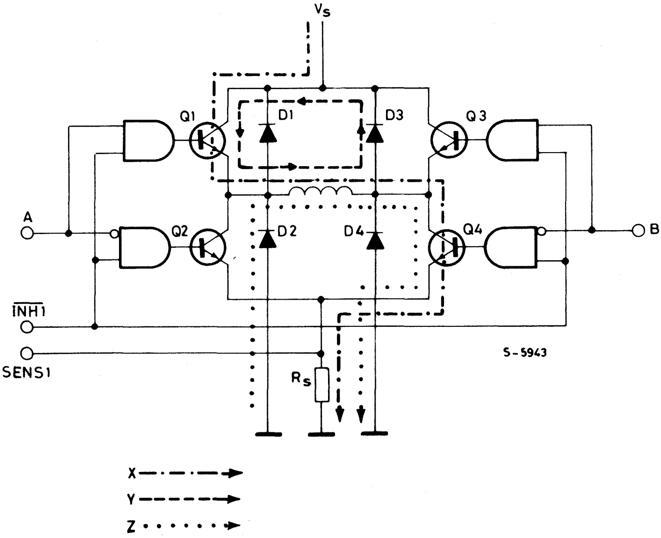

The energy stored in the winding is dissipated by current recirculating through Q1 and D3. Current decay through this path is rather slow because the voltage on the winding is low ($V_{CEsat\ Q1} + V_{D3}$) (figure 16).

Why is B pulled high, why push A low? The reason is to avoid the current decaying through R_S. Since the current recirculates in the upper half of the bridge, current only flows in the sensing resistor when the winding is driven. Less power is therefore dissipated in R_S and we can get away with a cheaper resistor.

Fig. 16 - Phase chopping waveforms. The example shows AB winding energized with A positive with respect to B. Control is high.

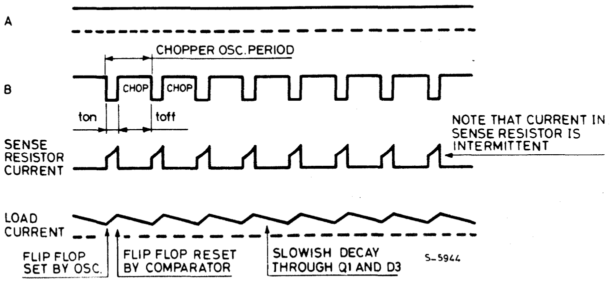

This explains why phase chopping is not suitable for unipolar motors: when the A winding is driven the chopper acts on the B winding. Clearly, this is no use at all for a variable reluctance motor and would be slow and inefficient for a bifilar wound permanent magnet motor.

The alternative is to tie the CONTROL input to ground so that the chopper acts on $\overline{\text{INH1}}$ and $\overline{\text{INH2}}$. Looking at the same example, A is high and B low. Q1 and Q4 are therefore conducting and current flows through Q1, the winding, Q4 and R_S (figure 17).

Fig. 17 – Inhibit chopping. The drive current (Q1, winding, Q4) in this case is interrupted by activating $\overline{\text{INH1}}$. The decay path through D2 and D3 is faster than the path Y of figure 15.

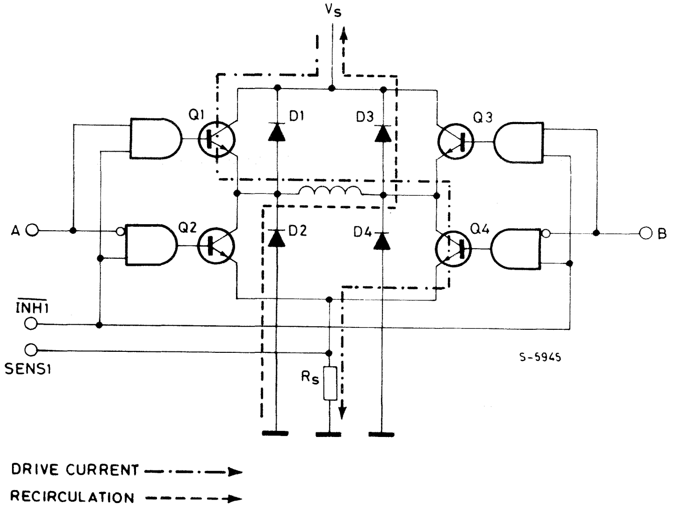

In this case when the voltage across R_S reaches V_{REF} the chopper flip flop is reset and $\overline{\text{INH1}}$ activated (brought low). $\overline{\text{INH1}}$, remember, turns off all four transistors therefore the current recirculates from ground, through D2, the winding and D3 to V_S. Discharged across the supply, which can be up to 46V, the current decays very rapidly (figure 18).

The usefulness of this second faster decay option is fairly obvious; it allows fast operation with bipolar motors and it is the only choice for unipolar motors. But why do we offer the slower alternative, phase chopping?

The answer is that we might be obliged to use a low chopper rate with a motor that does not store much energy in the windings. If the decay is very fast the average motor current may be too low to give an useful torque. Low chopper rates may, for example, be imposed if there is a larger motor in the same system. To avoid switching noise on the ground plane all drivers should be synchronized and the chopper rate is therefore determined by the largest motor in the system.

Multiple L297s are synchronised easily using the SYNC pin. This pin is the squarewave output of the on-chip oscillator and the clock input for the choppers. The first L297 is fitted with the oscillator components and outputs a squarewave signal on this pin (figure 19). Subsequent L297s do not need the oscillator components and use SYNC as a clock input. An external clock may also be injected at this terminal if an L297 must be synchronized to other system components.

Fig. 18 – Inhibit chopper waveforms. Winding AB is energized and CONTROL is low.

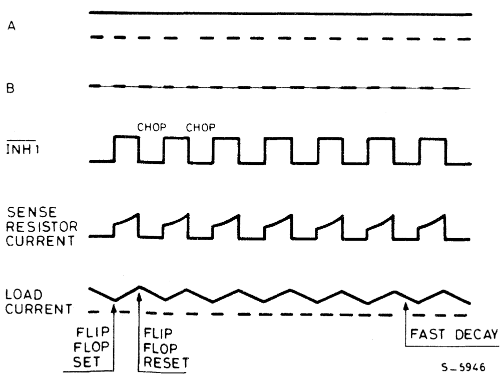

Fig. 19 - The chopper oscillator of multiple L297s are synchronized by connecting the SYNC inputs together.

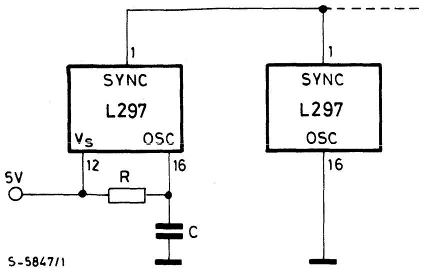

THE L297A

The L297A is a special version of the L297 developed originally for head positioning in floppy disk drives. It can, however, be used in other applications.

Compared to the standard L297 the differences are the addition of a pulse doubler on the step clock input and the availability of the output of the direction flip flop (block diagram, figure 20). To add these functions while keeping the low-cost 20-pin package the CONTROL and SYNC pins are not available on this version (they are not needed anyway). The chopper acts on the ABCD phase lines.

The pulse doubler generates a ghost pulse internally for each input clock pulse. Consequently the translator moves two steps for each input pulse. An external RC network sets the delay time between the input pulse and ghost pulse and should be chosen so that the ghost pulses fall roughly halfway between input pulses, allowing time for the motor to step.

This feature is used to improve positioning accuracy. Since the angular position error of a stepper motor is noncumulative (it cancels out to zero every four steps in a four step sequence motor) accuracy is improved by stepping two or four steps at a time.

Fig. 20 - The L297A, includes a clock pulse doubler and provides an output from the direction flip flop (DIR - MEM).

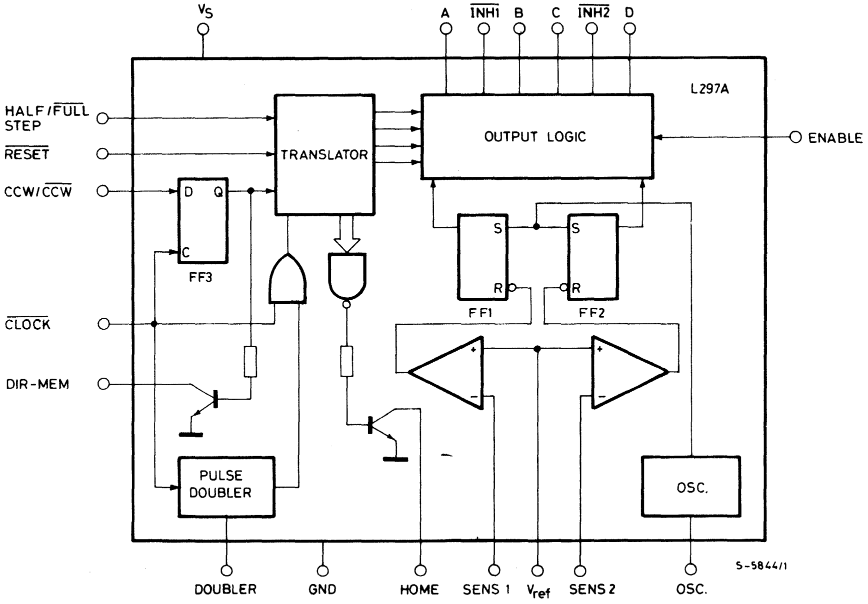

APPLICATION HINTS

Bipolar motors can be driven with an L297, an L298 or L293E bridge driver and very few external components (figure 21). Together these two chips form a complete microprocessor-to-stepper motor interface. With an L298 this configuration drives motors with winding currents up to 2.5A; for motors up to 1A per winding an L293E is used. If the PWM choppers are not required an L293 could also be used (it doesn't have the external emitter connections for sensing resistors) but the L297 is underutilized. If very high powers are required the bridge driver is replaced by an equivalent circuit

Fig. 21 - This typical application shows an L297 and L298 driving a bipolar stepper motor with phase currents up to 2A.

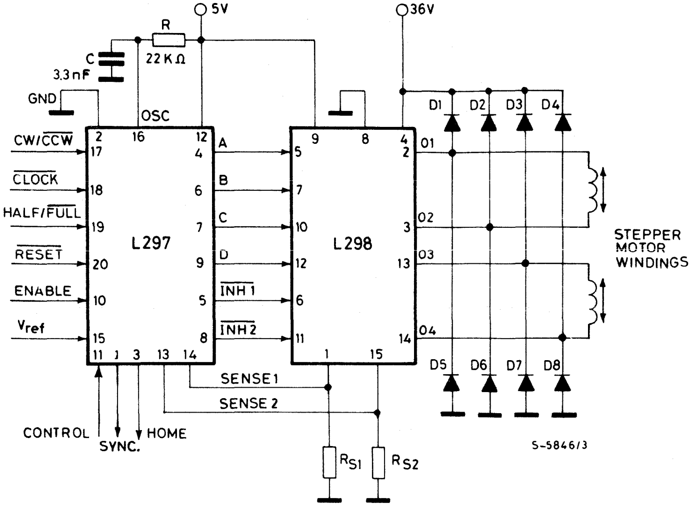

R_{S1} R_{S2} = 0.5Ω

D1 to D8 = 2 Fast Diodes $\begin{cases} V_F \leq 1{,}2V @ I = 2A \\ trr \leq 200\ ns \end{cases}$

made with discrete transistors. For currents up to 3.5A two L298's with paralleled outputs may be used.

For unipolar motors the best choice is a quad darlington array. The L702 can be used if the choppers are not required but an L7150 or L7180 is preferred. These quad darlingtons have external emitter connections which are connected to sensing resistors (figure 22). Since the chopper acts on the inhibit lines, four AND gates must be added in this application.

Also shown in the schematic is a zener diode in series with the suppression diodes. This serves to increase the voltage across which energy stored in

Fig. 22 - For unipolar motors a quad darlington array is coupled to the L297. Inhibit chopping is used so the four AND gates must be added.

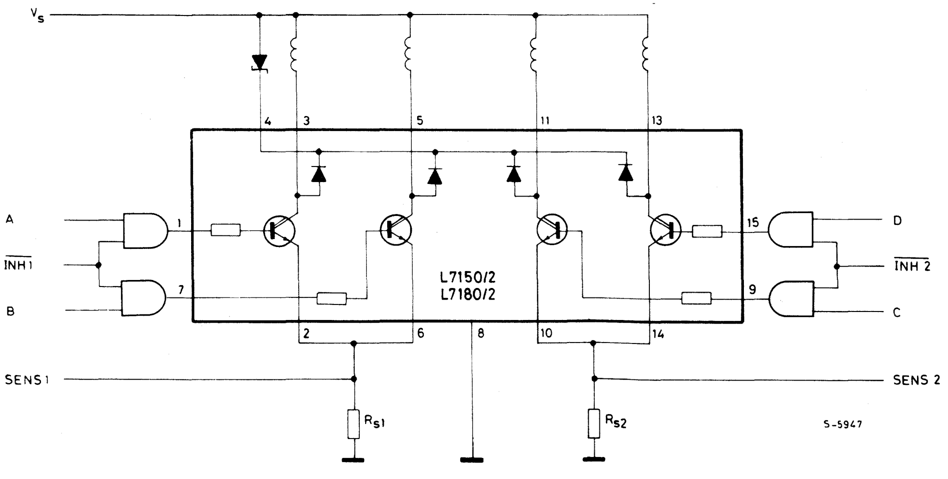

the winding is discharged and therefore speed the current decay.

In all applications where the choppers are not used it is important to remember that the sense inputs must be grounded and V_{REF} connected either to V_s or any potential between V_s and ground.

The chopper oscillator frequency is determined by the RC network on pin 16. The frequency is roughly 1/0.7 RC and R must be more than 10KΩ. When the L297A's pulse doubler is used, the delay time is determined by the network R_d C_d and is approximately 0.75 R_d C_d. R_d should be in the range 3 kΩ - 100 kΩ (figure 23).

Fig. 23 - The clock pulse doubler inserts a ghost pulse τ_o seconds after the input clock pulse. R_d C_d is chosen to give a delay of approximately half the input clock period.

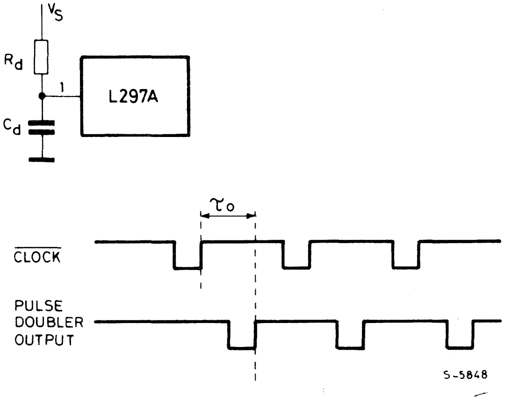

PIN FUNCTIONS - L297

N°	NAME	FUNCTION
1	SYNC	Output of the on-chip chopper oscillator. The SYNC connections of all L297s to be synchronized are connected together and the oscillator components are omitted on all but one. If an external clock source is used it is injected at this terminal.
2	GND	Ground connection.
3	HOME	Open collector output that indicates when the L297 is in its initial state (ABCD = 0101). The transistor is open when this signal is active.
4	A	Motor phase A drive signal for power stage.
5	$\overline{\text{INH1}}$	Active low inhibit control for driver stages of A and B phases. When a bipolar bridge is used this signal can be used to ensure fast decay of load current when a winding is de-energized. Also used by chopper to regulate load current if CONTROL input is low.
6	B	Motor phase B drive signal for power stage.

PIN FUNCTIONS – L297 (continued)

N°	NAME	FUNCTION
7	C	Motor phase C drive signal for power stage.
8	$\overline{\text{INH2}}$	Active low inhibit control for drive stages of C and D phases. Same functions as $\overline{\text{INH1}}$.
9	D	Motor phase D drive signal for power stage.
10	ENABLE	Chip enable input. When low (inactive) $\overline{\text{INH1}}$, $\overline{\text{INH2}}$, A, B, C and D are brought low.
11	CONTROL	Control input that defines action of chopper. When low chopper acts on $\overline{\text{INH1}}$ and $\overline{\text{INH2}}$; when high chopper acts on phase lines ABCD.
12	V_s	5V supply input.
13	$SENS_2$	Input for load current sense voltage from power stages of phases C and D.
14	$SENS_1$	Input for load current sense voltage from power stages of phases A and B.
15	V_{ref}	Reference voltage for chopper circuit. A voltage applied to this pin determines the peak load current.
16	OSC	An RC network (R to V_{CC}, C to ground) connected to this terminal determines the chopper rate. This terminal is connected to ground on all but one device in synchronized multi - L297 configurations. $f \cong 1/0.69\ RC$, $R > 10\ k\Omega$.
17	CW/$\overline{\text{CCW}}$	Clockwise/counterclockwise direction control input. Physical direction of motor rotation also depends on connection of windings. Synchronized internally therefore direction can be changed at any time.
18	$\overline{\text{CLOCK}}$	Step clock. An active low pulse on this input advances the motor one increment. The step occurs on the rising edge of this signal.
19	HALF/$\overline{\text{FULL}}$	Half/full step select input. When high selects half step operation; when low selects full step operation. One-phase-on full step mode is obtained by selecting FULL when the L297's translator is at an even-numbered state. Two-phase-on full step mode is set by selecting FULL when the translator is at an odd numbered position. (The home position is designated state 1).

PIN FUNCTIONS – L297(continued)

N°	NAME	FUNCTION
20	RESET	Reset input. An active low pulse on this input restores the translator to the home position (state 1, ABCD = 0101).

PIN FUNCTIONS - L297A

Pin function of the L297A are identical to those of the L297 except for pins 1 and 11.

N°	NAME	FUNCTIONS
1	DOUBLER	An RC network connected to this pin determines the delay between an input clock pulse and the corresponding ghost pulse.
11	DIR-MEM	Direction Memory. Inverted output of the direction flip flop. Open collector output.

Fig. 24 – Connection diagrams

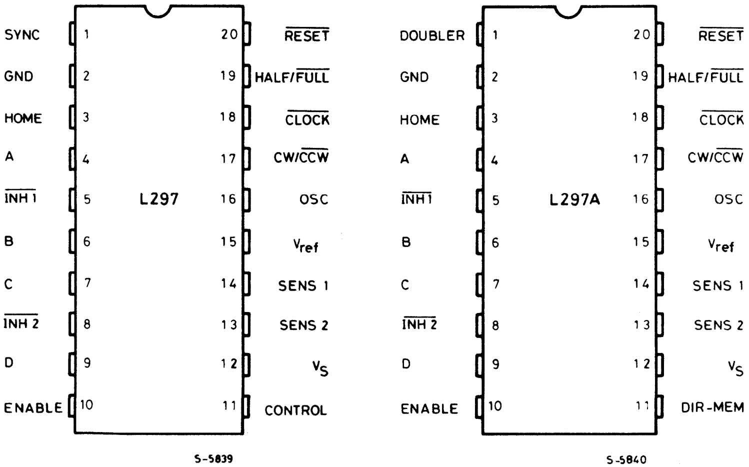

A DESIGNER'S GUIDE TO THE L200 VOLTAGE REGULATOR

Delivering 2A at a voltage variable from 2.85V to 36V, the L200 voltage regulator is a versatile device that simplifies the design of linear supplies. This design guide describes the operation of the device and its applications.

The introduction of integrated regulator circuits has greatly simplified the work involved in designing supplies. Regulation and protection circuits required for the supply, previously realized using discrete components, are now integrated in a single chip. This has led to significant cost and space saving as well as increased reliability. Today the designer has a wide range of fixed and adjustable, positive and negative series regulators to choose from as well as an increasing number of switching regulators.

The L200 is a positive variable voltage regulator which includes a current limiter and supplies up to 2A at 2.85 to 36V.

The output voltage is fixed with two resistors or, if a continuously variable output voltage is required, with one fixed and one variable resistor.

The maximum output current is fixed with a low value resistor. The device has all the characteristics common to normal fixed regulators and these are described in the datasheet. The L200 is particularly suitable for applications requiring output voltage variation or when a voltage not provided by the standard regulators is required or when a special limit must be placed on the output current.

The L200 is available in two packages:

Pentawatt — Offers easy assembly and good reliability. The guaranteed thermal resistance ($R_{th\ j\text{-}case}$) is 3°C/W (typically 2°C/W) while if the device is used without heatsink we can consider a guaranteed junction-ambient thermal resistance of 50°C/W.

TO-3 — For professional and military use or where good hermeticity is required.
The guaranteed junction-case thermal resistance is 4°C/W, while the junction-ambient thermal resistance is 35°C/W.

The junction-case thermal resistance of this package, which is greater than that of the Pentawatt, is partly compensated by the lower contact resistance with the heatsink, especially when an electrical insulator is used.

CIRCUIT OPERATION

As can be seen from the block diagram (fig. 1) the voltage regulation loop is almost identical to that of fixed regulators. The only difference is that the negative feedback network is external, so it can be varied (fig. 3). The output is linked to the reference by:

$$V_{out} = V_{ref}\ (1 + \frac{R2}{R1}) \qquad (1)$$

Considering V_{out} as the output of an operational amplifier with gain equal to $G_V = 1 + R2/R1$ and input signal equal to V_{ref}, variability of the output voltage can be obtained by varying R1 or R2 (or both). It's best to vary R1 because in this way the current in resistors R1 and R2 remains constant (this current is in fact given by $V_{ref}/R1$).

(Equation (1) can also be found in another way which is more useful in order to understand the descriptions of the applications discussed.

$$V_{out} = R1\ i_1 + R2\ i_2$$

and since in practice $i_1 \gg i_4$ (i_4 has a typical value of 10 μA) we can say that

$$V_{out} = R1\ i_1 + R2\ i_1 \quad \text{with} \quad i_1 = \frac{V_{ref}}{R1}$$

Therefore

$$V_{out} = \frac{R2}{R1} V_{ref} + V_{ref} = V_{ref}\ (1 + \frac{R2}{R1})$$

In other words R1 fixes the value of the current circulating in R2 so R2 is determined.

Fig. 1 - Block diagram

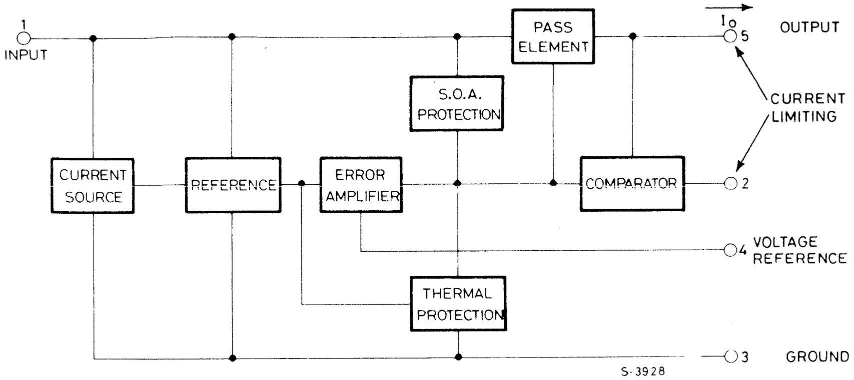

Fig. 2 - Schematic diagram

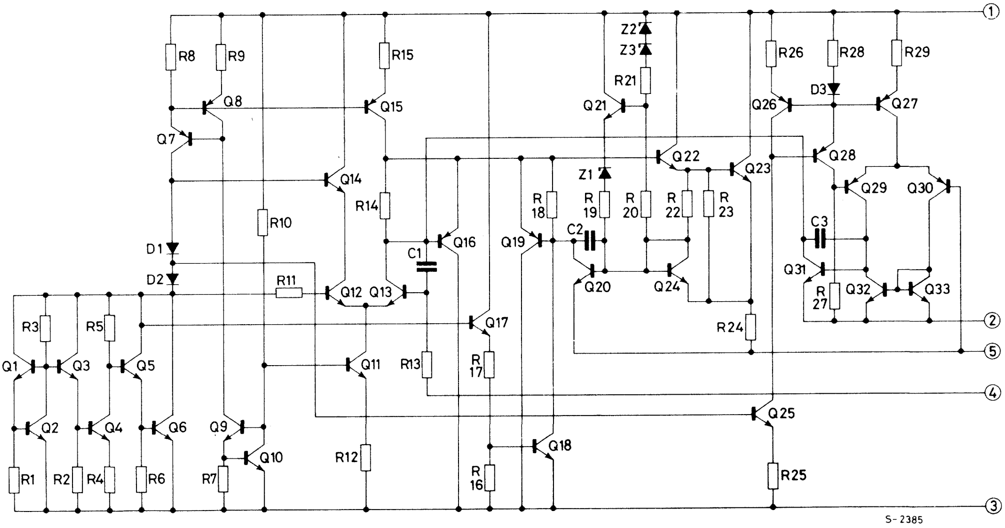

Fig. 3

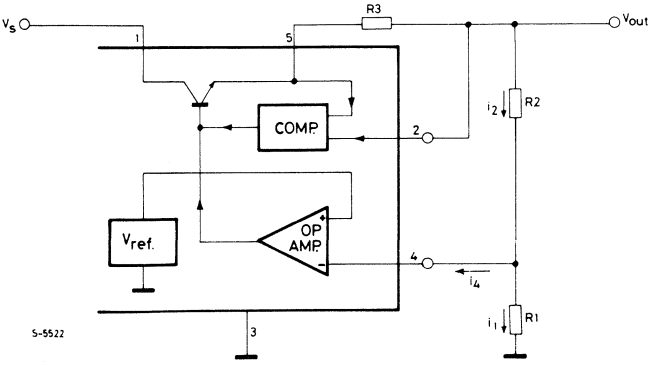

Overload protection

The device has an overload protection circuit which limits the current available.

Referring to fig. 2, R24 operates as a current sensor. When at the terminals of R24 there is a voltage drop sufficient to make Q20 conduct, Q19 begins to draw current from the base of the power transistor (darlington formed by Q22 and Q23) and the output current is limited. The limit depends on the current which Q21 injects into the base of Q20. This current depends on the drop-out and the temperature which explains the trend of the curves in fig. 4.

Fig. 4

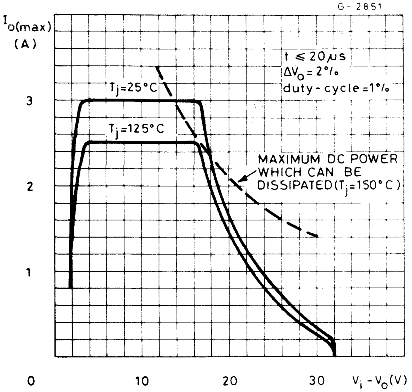

Thermal protection

The junction temperature of the device may reach destructive levels during a short circuit at the output or due to an abnormal increase in the ambient temperature. To avoid having to use heatsinks which are costly and bulky, a thermal protection circuit has been introduced to limit the output current so that the dissipated power does not bring the junction temperature above the values allowed. The operation of this circuit can be summarized as follows.

In Q17 there is a constant current equal to:

$$\frac{V_{ref} - V_{BE17}}{R17 + R16} \qquad (V_{ref} = 2.75\text{V typ})$$

The base of Q18 is therefore biased at:

$$V_{BE18} = \frac{V_{ref} - V_{BE17}}{R16 + R17} \cdot R16 \cong 350 \text{ mV}$$

Therefore at T_j = 25°C Q18 is off (since 600 mV is needed for it to start conducting). Since the V_{BE} of a silicon transistor decreases by about 2 mV/°C, Q18 starts conducting at the junction temperature:

$$T_j = \frac{600-350}{2} + 25 = 150°\text{C}$$

Current limitation

The innovative feature of this device is the possibility of acting on the current regulation loop, i.e. of limiting the maximum current that can be supplied to the desired value by using a simple resistor (R3 in fig. 2). Obviously if R3 = 0 the maximum output current is also the maximum current that the device can supply because of its internal limitation.

The current loop consists of a comparator circuit with fixed threshold whose value is V_{SC}. This comparator intervenes when $I_o \cdot R3 = V_{SC}$, hence $I_o = \frac{V_{SC}}{R3}$ (V_{SC} is the voltage between pins 5 and 2 with typical value of 0.45V).

Special attention has been given to the comparator circuit in order to ensure that the device behaves as a current generator with high output impedance.

TYPICAL APPLICATIONS

Programmable current regulator

Fig. 5 shows the device used as current generator. In this case the error amplifier is disabled by short-circuiting pin 4 to ground.

Fig. 5

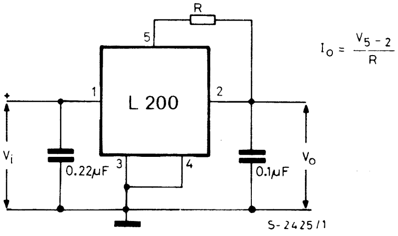

The output current I_o is fixed by means of R:

$$I_o = \frac{V_{5-2}}{R}$$

The output voltage can reach a maximum value $V_i - V_{drop} \cong V_i - 2V$ (V_{drop} depends on I_o).

Programmable voltage regulator

Fig. 6 shows the device connected as a voltage regulator and the maximum output current is the maximum current that the device can supply. The output voltage V_o is fixed using potentiometer R2. The equation which gives the output voltage is as follows:

$$V_o = V_{ref} \left(1 + \frac{R2}{R1}\right)$$

By substituting the potentiometer with a fixed resistor and choosing suitable values for R1 and R2, it is possible to obtain a wide range of fixed output voltages.

Fig. 6

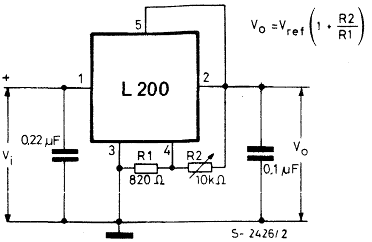

The following formulas and tables can be used to calculate some of the most common output voltages.

Having fixed a certain V_o, using the previous formula, the maximum value is:

$$V_{o\ max} = V_{ref\ max}\ (1 + \frac{R2_{\ max}}{R1_{min}})$$ and the minimum value is:

$$V_{o\ min} = V_{ref\ min}\ (1 + \frac{R2_{\ min}}{R1\ max})$$

The table below indicates resistor values for typical output voltages:

V_o ± 4%	R1 ± 1%	R2 ± 1%
5V	1.5 kΩ	1.2 kΩ
12V	1 kΩ	3.3 kΩ
15V	750 Ω	3.3 kΩ
18V	330 Ω	1.8 kΩ
24V	510 Ω	3.9 kΩ

Programmable current and voltage regulator

The typical configuration used by the device as a voltage regulator with external current limitation is shown in fig. 7. The fixed voltage of 2.77V at the terminals of R1 makes it possible to force a constant current across variable resistor R2. If R2 is varied, the voltage at pin 2 is varied and so is the output voltage.

The output voltage is given by:

$$V_o = V_{ref} \cdot (1 + \frac{R2}{R1}), \text{ with } V_{ref} = 2.77\text{V typ}$$

and the maximum output current is given by:

$$I_{o\ max} = \frac{V_{5-2}}{R3} \text{ with } V_{5-2} = 0.45\text{V typ.}$$

To maintain a sufficient current for good regulation the value of R1 should be kept low. When there is no load, the output current is $V_{ref}/R1$. Suitable values of R1 are between 500Ω and 1.5 kΩ. If the load is always present the maximum value for R1 is limited by the current value (10 μA) at the input of the error amplifier (pin 4).

Fig. 7

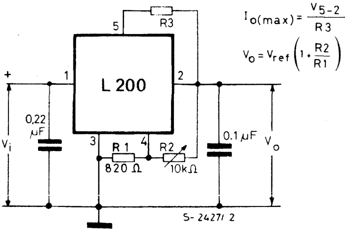

Digitally selected regulator with inhibit

The output voltage of the device can be regulated digitally as shown in fig. 8. The output voltage depends on the divider formed by R5 and a combination of R1, R2, R3 and P2. The device can be switched off with a transistor.

When the inhibit transistor is saturated, pin 2 is brought to ground potential and the output voltage does not exceed 0.45V.

Fig. 8

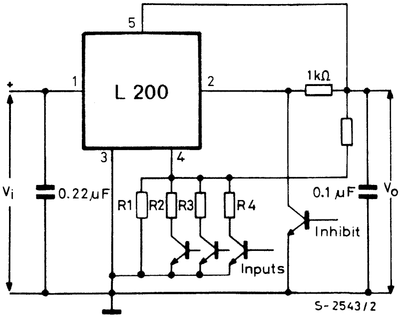

Reducing power dissipation with dropping resistor

If may sometimes be advisable to reduce the power dissipated by the device. A simple and economic method of doing this is to use a resistor connected in series to the input as shown in fig. 9. The input-output differential voltage on the device is thus reduced.

Fig. 9

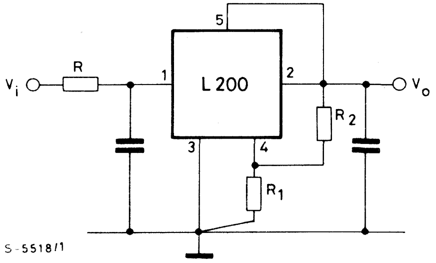

The formula for calculating R is as follows:

$$R = \frac{V_{i\,min} - (V_o + V_{drop})}{I_o}$$

Where V_{drop} is the minimum differential voltage between the input and the output of the device at current I_o. $V_{in\,min}$ is the minimum input voltage. V_o is the output voltage and I_o the output current.

With constant load, resistor R can be connected between pins 1 and 2 of the IC instead of in series with the input (fig. 10). In this way, part of the load current flows through the device and part through the resistor. This configuration can be used when the minimum current by the load is:

$$I_{o\,min} = \frac{V_{drop}}{R} \quad \text{(instant by instant)}$$

Fig. 10

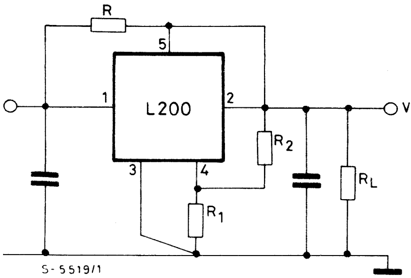

Soft start

When a slow rise time of the output voltage is required, the configuration in fig. 11 can be used. The rise time can be found using the following formula:

$$t_{on} = \frac{C V_o R}{0.45}$$

At switch on capacitor C is discharged and it keeps the voltage at pin 2 low; or rather, since a voltage of more than 0.45V cannot be generated between pins 5 and 2, the V_o follows the voltage at pin 2 at less than 0.45V.

Fig. 11

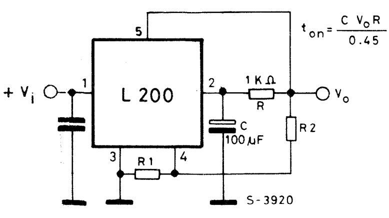

Capacitor C is charged by the constant current i_c.

$$i_c = \frac{V_{sc}}{R}$$

Therefore the output reaches its nominal value after the time t_{on}:

$$V_o - V_{sc} = \frac{i_c \cdot t_{on}}{C}$$

$$t_{on} = C \cdot \frac{(V_o - 0.45)}{0.45} \cdot R \cong \frac{C V_o R}{0.45}$$

Light controller

Fig. 12 shows a circuit in which the output voltage is controlled by the brightness of the surrounding environment. Regulation is by means of a photoresistor in parallel with R1. In this case, the output voltage increases as the brightness increases. The opposite effect, i.e. dimming the light as the ambient light increases, can be obtained by connecting the photoresistor in parallel with R2.

Fig. 12

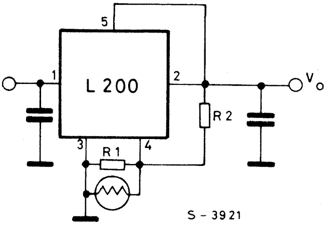

Light dimmer for car display

Although digital displays in cars are often more aesthetically pleasing and frequently more easily read they do have a problem. Under varying ambient light conditions they are either lost in the background or alternatively appear so bright as to distract the driver. With the system proposed here, this problem is overcome by automatically adjusting the display brightness during daylight conditions and by giving the driver control over the brightness during dusk and darkness conditions.

The circuit is shown in fig. 13. The primary supply is shown taken straight from the car battery however it is worth noting that in a car there is always the risk of dump voltages up to 120V and it is recommended that some form of protection is included against this.

Under daylight conditions i.e. with sidelights off and T1 not conducting the output of the device is determined by the values of R1, R2 and the photoresitor (PTR). The output voltage is given by

$$V_{out} = V_{ref} \left(1 + \frac{R2}{PTR//R1}\right)$$

If the ambient light intensity is high, the resistance of the photoresistor will be low and therefore V_{out} will be high. As the light decreases, so V_{out} decreases dimming the display to a suitable level.

Fig. 13

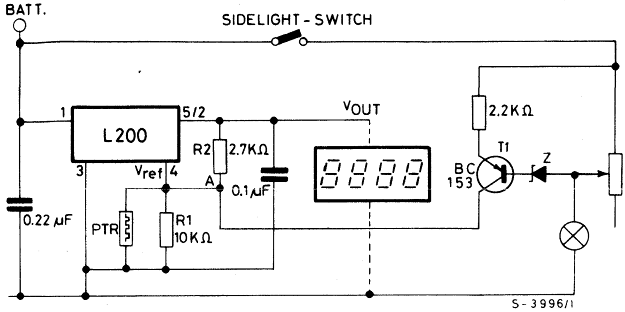

In dusk conditions, when the sidelights are switched on, T1 starts to conduct with its conduction set by the potentiometer. With the potentiometer wiper at its uppermost position the sidelights are at their brightest and current through T1 would be a minimum. With the wiper at its lowest position obviously the opposite conditions apply.

The current through T1 is felt at the summing node A along with the currents through R2 and the parallel network R1, PTR. Since V_{ref} is constant the current flowing through R1, PTR must also be constant. Therefore any change in the current through T1 causes an equal and opposite change in the current through R2. Therefore as I_{T1} increases, V_{out} decreases i.e. as the brightness of the sidelights is increased or decreased so is the brightness of the display.

The values of R2 and PTR should be selected to give the desired minimum and maximum brightness levels desired under both automatic and manual conditions although the minimum brightness under manual conditions can also be set by the maximum current flowing through T1 and, in any case, this should not exceed the maximum current through R2 under automatic operation.

The circuit shown with a small modification can also be used for dimmers other than in a car. Fig. 15 shows the modification needed. The zener diode should have a $V_F \geqslant 2.5V$ at $I = 10\ \mu A$.

Fig. 14

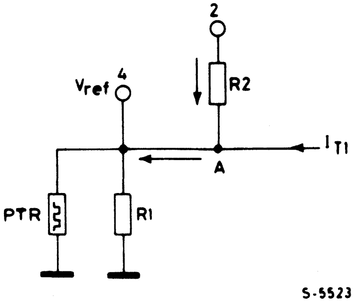

Fig. 15

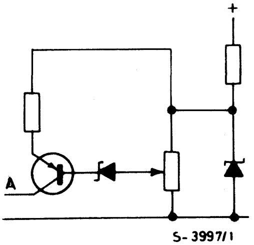

Higher input or output voltages

Certain applications may require higher input or output voltages than the device can produce. The problem can be solved by bringing the regulator back into the normal operating units with the help of external components.

When there are high input voltages, the excess voltage must be absorbed with a transistor. Figs. 16 and 17 show the two circuits:

Fig. 16

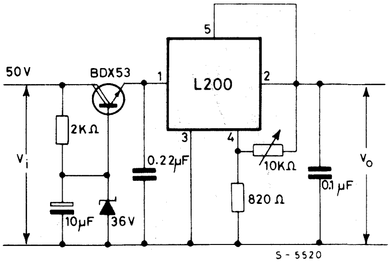

Fig. 17

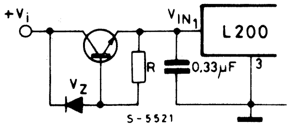

The designer must take into account the dissipated power and the SOA of the preregulation transistor. For example, using the BDX53, the maximum input voltage can reach 56V (fig. 16). In these conditions we have 20V of V_{CE} on the transistor and with a load current of 2A the operation point remains inside the SOA. The preregulation used in fig. 16 reduces the ripple at the input of the device, making it possible to obtain an output voltage with negligible ripple.

If high output voltages are also required, a second zener, V_Z, is used to refer the ground pin of an IC to a potential other than zero; diode D1 provides output shortcircuit protection (fig. 18).

Fig. 18

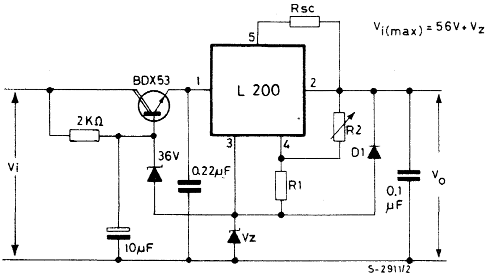

Fig. 19

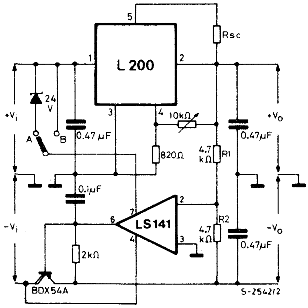

A : $V_{i(max)} \leq \pm 34V$ $3 < V_o < 30$

B : $V_{i(max)} \leq \pm 22V$ $3 < V_o < 18$

Positive and negative voltage regulators

The circuit in fig. 19 provides positive and negative balanced, stabilized voltages simultaneously. The L200 regulator supplies the positive voltage while the negative is obtained using an operational amplifier connected as follower with output current booster.

Tracking of the positive voltage is achieved by putting the non-inverting input to ground and using the inverting input to measure the feedback voltage coming from divider R1-R2.

The system is balanced when the inputs of the operational amplifier are at the same voltage, or, since one input is at fixed ground potential, when the voltage of the intermediate point of the divider goes to 0 Volts. This is only possible if the negative voltage, on command of the op-amp, goes to a value which will make a current equal to that in R1 flows in R2. The ratio which expresses the negative output voltage is:

$$V^- = V^+ \cdot \frac{R2}{R1} \qquad \text{(If R2= R1, we'll get } V^- = V^+\text{)}$$

Since the maximum supply voltage of the op amp used is ± 22V, when pin 7 is connected to point B output voltages up to about 18V can be obtained. If on the other hand pin 7 is connected to point A, much higher output voltages, up to about 30V, be obtained since in this case the input voltage can rise to 34V.

Fig. 20 shows a diagram is which the L165 power op amp is used to produce the negative voltage. In this case (as in fig. 19) the output voltage is limited by the absolute maximum rating of the supply voltage of the L165 which is ± 18V. Therefore to get a higher V_{out} we must use a zener to keep the device supply within the safety limits.

If we have a transformer with two separate secondaries, the diagram of fig. 21 can be used to obtain independent positive and negative voltages. The two output diodes, D1 and D2, protect the devices from shortcircuits between the positive and negative outputs.

Fig. 20

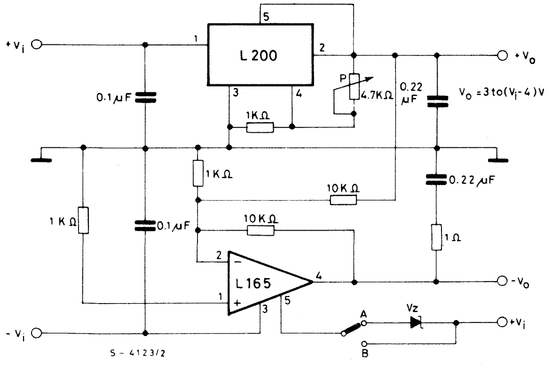

A: for $\pm 18V \leqslant V_i \leqslant 32V$

Note: V_Z must be chosen in order to verify $2 V_i - V_Z = 36V$

B: for $V_i \leqslant \pm 18V$

Fig. 21

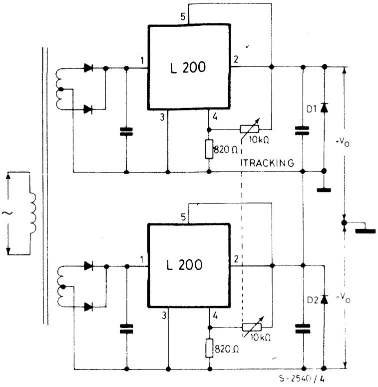

Compensation of voltage drop along the wires

The diagram in fig. 22 is particularly suitable when a load situated far from the output of the regulator has to be supplied and when we want to avoid the use of two sensing wires. In fact, it is possible to compensate the voltage drop on the line caused by the load current (see the two curves in fig. 23 and 24). R_K transforms the load current I_L into a proportional voltage in series to the reference of the L200. R_K I_L is then amplified by the factor

$$\frac{R2 + R1}{R1}.$$

With the values of R_Z, R2 and R1 known, we get:

$$R_K = R_Z \frac{R1}{R1 + R2}$$

R_Z, R1 and R2 are assumed to be constant.
If R_K is higher than 10 Ω, the output voltage should be calculated as follows:

$$V_o = I_d \; R_K + V_{ref} \frac{R2 + R1}{R1}$$

Fig. 23

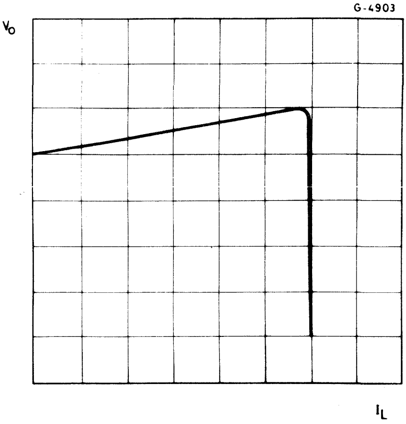

Fig. 24

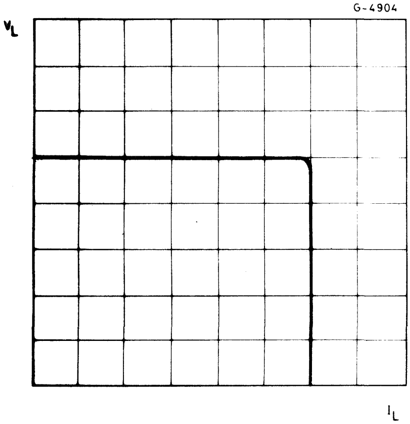

Fig. 22

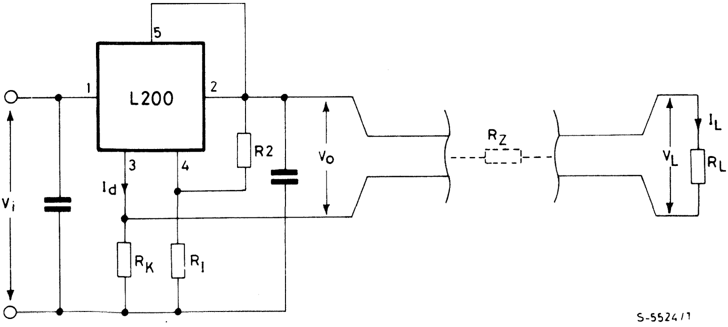

Motor speed control

Fig. 25 shows how to use the device for the speed control of permanent magnet motors. The desired speed, proportional to the voltage at the terminal of the motor, is obtained by means of R1 and R2.

$$V_M = V_{ref}\left(1 + \frac{R2}{R1}\right)$$

To obtain better compensation of the internal motor resistance, which is essential for good regulation, the following equation is used:

$$R3 \leqslant \frac{R1}{R2} \cdot R_M$$

This equation works with infinite R4. If R4 is finite, the motor speed can be increased without altering the ratio R2/R1 and R3. Since R4 has a constant voltage (V_{ref}) at its terminals, which does not vary as R4 varies, this voltage acts on R2 as a constant current source variable with R4. The voltage drop on R2 thus increases, and the increase is felt by the voltage at the terminals of the motor. The voltage increase at the motor terminals is:

$$V_M = \frac{V_{ref}}{R4 + R3} \cdot R2.$$

A circuit for a 30W motor with $R_M = 4\Omega$, $R1 = 1\ k\Omega$, $R2 = 4.3\ k\Omega$, $R4 = 22\ k\Omega$ and $R3 = 0.82\Omega$ has been realized.

Fig. 25

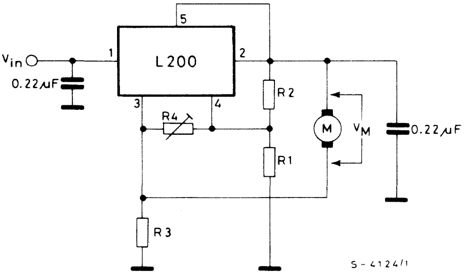

Power amplitude modulator

In the configuration of fig. 26 the L200 is used to send a signal onto a supply line. Since the input signal V_i is DC decoupled, the V_o is defined by:

$$V_o = V_{ref}\left(1 + \frac{R2}{R1}\right)$$

The amplified signal V_i whose value is:

$$G_v = -\frac{R2}{R3}$$

is added to this component. By ignoring the current entering pin 4, we must impose $i_1 = i_2 + i_3$ (1) and since the voltage between pin 4 and ground remains fixed (V_{ref}) as long as the device is not in saturation, $i_1 = 0$ and equation (1) becomes:

$i_2 = -i_3$ with $i_3 = \frac{v_i}{R3}$ (for $X_c \ll R3$) - Therefore:

$$v_o = R2\ i_2 = -\frac{v_i}{R3} \cdot R2.$$

An application is shown in fig. 27. If the DC level is to be varied but not the AC gain, R1 should be replaced by a potentiometer.

Fig. 26

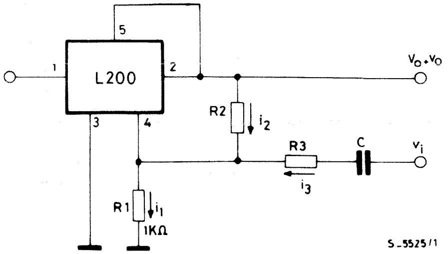

Fig. 27

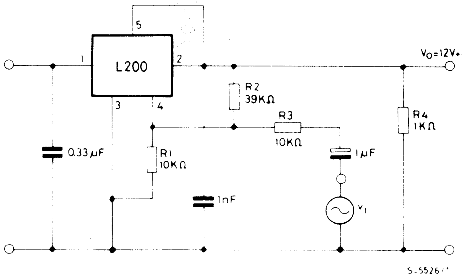

HIGH CURRENT REGULATORS

To get a higher current than can be supplied by a single device one or more external power transistors must be introduced. The problem is then to extend all the device's protection circuits (short-circuit protection, limitation of T_j of external power devices and overload protection) to the external transistors. Constant current or foldback current limitation therefore becomes necessary.

When the regulator is expected to withstand a permanent shortcircuit, constant current limitation becomes more and more difficult to guarantee as the nominal V_o increases. This is because of the increase in V_{CE} at the terminals of the transistor, which leads to an increase in the dissipated power. The heatsink has to be calculated in the heaviest working conditions, and therefore in shortcircuit. This increases weight, volume and cost of the heatsink and increase of the ambient temperature (because of high power dissipation). Besides heatsink, power transistors must be dimensioned for the short-circuit.

This type, of limitation is suited, for example, with highly capacitive loads. Efficiency is increased if preregulation is used on the input voltage to maintain a constant drop-out on the power element for all V_{out}, even in shortcircuit. Foldback limitation, on the other hand, allows lighter shortcircuit operating conditions than the previous case. The type of load is important.

If the load is highly capacitive, it is not possible to have a high ratio between I_{max} and I_{sc} because at switch-on, with load inserted, the output may not reach its nominal value.

Other protection against input shortcircuit, mains failure, overvoltages and output reverse bias can be realized using two diodes, D1 and D2, inserted as indicated in fig. 28.

Fig. 28

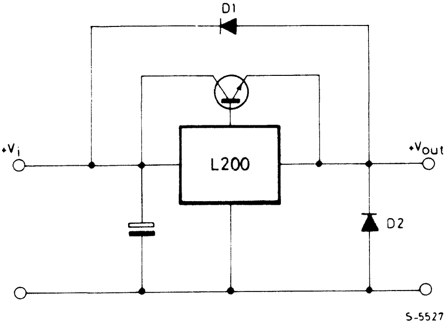

Use of a PNP power transistor

Fig. 29 shows the diagram of a high current supply using the current limitation of the L200. The output current is calculated using the following formula:

$$I_o = \frac{V_{SC}}{R_{SC}} \cong \frac{0.45V}{0.1\Omega} = 4.5A$$

Constant current limitation is used; so, in output shortcircuit conditions, the transistor dissipates a power equal to:

$$PD = V_i \cdot I_o = V_i \cdot \frac{V_{SC}}{R_{SC}}$$

Fig. 29

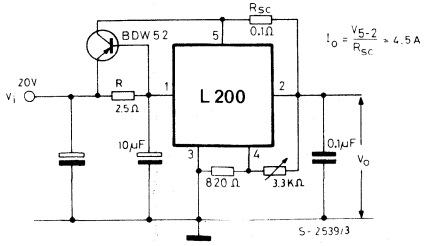

The operating point of the transistor should be kept well within the SOA; with R_{SC}= 0.1Ω, V_i must not exceed 20V. Part of the I_o crosses the transistor and part crosses the regulator.

The latter is given by: $I_{REG} = I_B + \frac{V_{BE}}{R}$.

where I_B is the base current of the transistor (~100 mA at I_C= 4A) and V_{BE} is the base-emitter voltage (~1V at I_C = 4A); with R = 2.5Ω, $I_{REG} \cong$ ≅ 500 mA.

Use of an NPN power transistor

Fig. 30 shows the same application as described in figure 29, using an NPN power transistor instead of a PNP. In this case an external signal transistor must be used to limit the current. Therefore:

$$I_o = \frac{V_{BE\ Q1}}{R_{SC}}$$

As regards the output shortcircuit, see par. 1.5.

Fig. 30

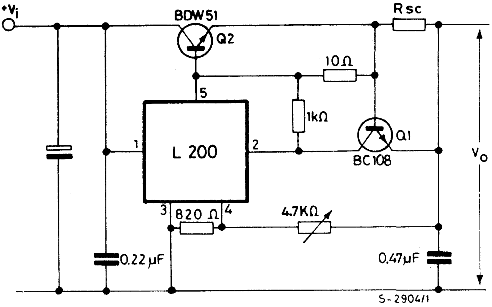

12V 4A Power supply

The diagram in fig. 31 shows a supply using the L200 and the BD705. The 1 kΩ potentiometer, PT1, together with the 3.3 kΩ resistor are used for fine regulation of the output voltage.

Current limitation is of the type shown in fig. 32. Trimmer PT2 acts on strech AB of characteristic. With the values indicated (PT2= 1 kΩ, PT3= 470Ω, R = 3 kΩ), currents from 3 to 4A can be limited. The field of variation can be increased by increasing the value of R_{SC} or by connecting one terminal of PT3 to the base of the power transistor, which, however, provides less stable limitation. If section AB is moved, section BC will also be moved.

The slope of BC can be varied using PT3. The voltage level at point B is fixed by the voltage of the zener diode. The capacitor in parallel to the zener ensures correct switch-on with full load. The BD705 should always be used well within its safe operating area. If this is not possible two or more BD705s should be used, connected in parallel (fig. 33).

Further protection for the external power transistor can be provided as shown in fig. 34. The PTC resistor, whose temperature intervention point must prevent the T_j of the power transistor from reaching its maximum value, should be fixed to the dissipator near the power transistor. Dimensioning of R_A and R_B depends on the PTC used.

Fig. 31

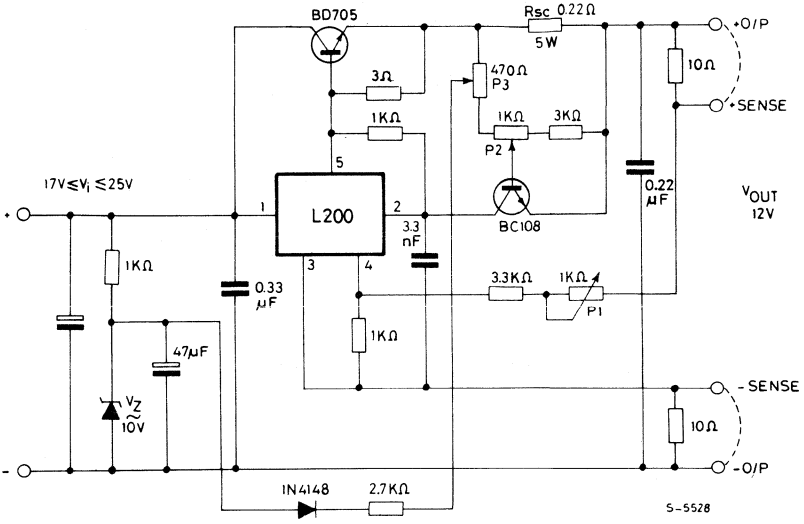

Fig. 32

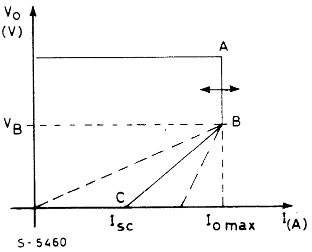

Fig. 34

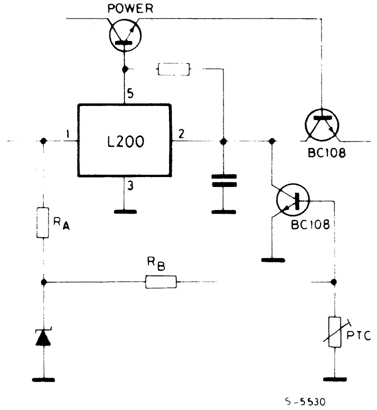

Fig. 33

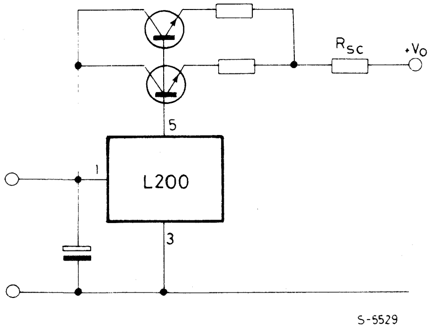

Voltage regulator from 0V to 16V - 4.5A

Fig. 35 shows an application for a high current supply with output voltage adjustable from 0V to 16V, realized with two L200 regulators and an external power transistor. With the values indicated, the current can be regulated from 2A to 4.5A by potentiometer PT2. PT1, on the other hand, is used for constant current or foldback current limitation. The integrated circuit IC2, which does not require a heatsink and has excellent temperature stability, is used to obtain the 0V output. It is connected so as to lower pin 3 of IC1 until pin 4 reaches 0V. Q1 and Q2 ensure correct operation of the supply at switch-on and switch-off.

Fig. 35

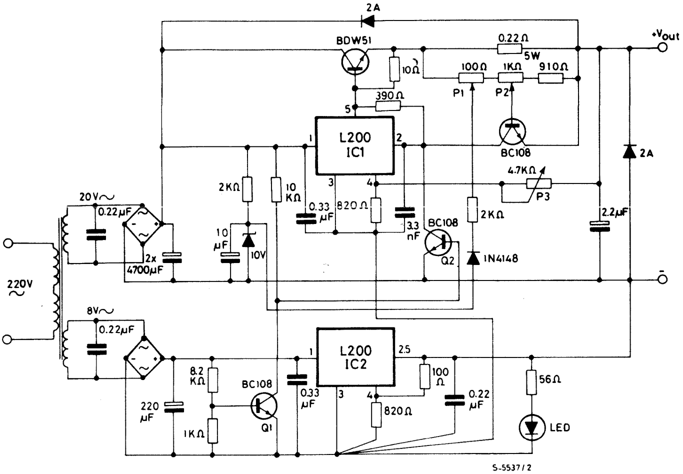

Power supply with V_o= 2.8 to 18V, I_o= 0 to 2.5A

The diagram in fig. 36 shows a supply with output voltage variable from 2.8V to 18V and constant current limitation from 0A to 2.5A. The output current can be regulated over a wide range by means of the op. amp. and signal transistor TR_2. The op. amp. and the transistor are connected in the voltage-current converter configuration. The voltage is taken at the terminals of R3 and converted into current by PT_2.

I_o is fixed as follows:

$$\frac{R4\ I_o}{PT_2} = I_1\ (*) \qquad (**)\ I_{sc} = \frac{V_{SC}}{R2}$$

When $I_1 = I_{sc}$, the regulator starts to operate as a current generator. By making (*) equal to (**) we get:

$$\frac{R4\ I_o}{PT_2} = \frac{V_{SC}}{R2}\ ;\text{ therefore } I_o = \frac{V_{SC}}{R2 \cdot R4} \cdot PT_2.$$

Diodes D1 and D2 keep transistor TR_2 in linear condition in the case of small output currents. If it is not necessary to limit the current to zero, one of the diodes can be eliminated: the second diode could also be eliminated if TR_1 were a darlington instead of a transistor.

The op. amp. must have inputs compatible with ground in order to guarantee current limitation even in shortcircuit. With a negative voltage available, even of only a few volts, current limitation is simplified.

Fig. 36

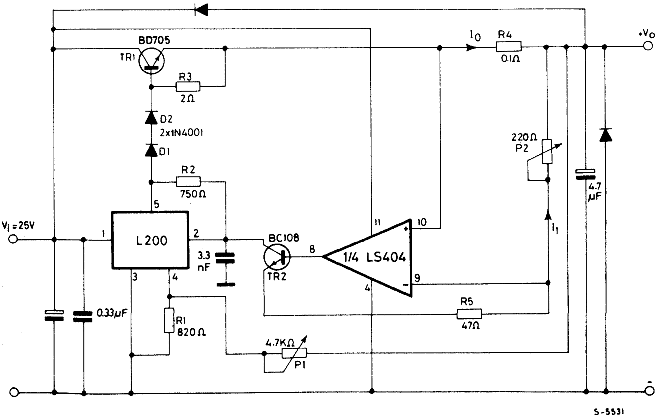

LAYOUT CONSIDERATIONS

The performance of a regulator depends to a great extent on the case with which the printed circuit is produced. There must be no impulsive currents (like the one in the electrolytic filter capacitor at the input of the regulator) between the ground pin of the device (pin 3) and the negative output terminal because these would increase the output ripple. Care must also be taken when inserting the resistor connected between pin 4 and pin 3 of the device.

The track connecting pin 3 to a terminal of this resistor should be very short and must not be crossed by the load current (which, since it is generally variable, would give rise to a voltage drop on this stretch of track, altering the value of V_{ref} and threfore of V_o.

When the load is not in the immediate proximity of the regulator output "+ sense" and "— sense" terminals should be used (see fig. 37). By connecting the "+ sense" and "— sense" terminals directly at the charge terminals the voltage drop on the connection cable between supply and load are compensated. Fig. 37 shows how to connect supply and load using the sensing clamps terminals.

Fig. 37

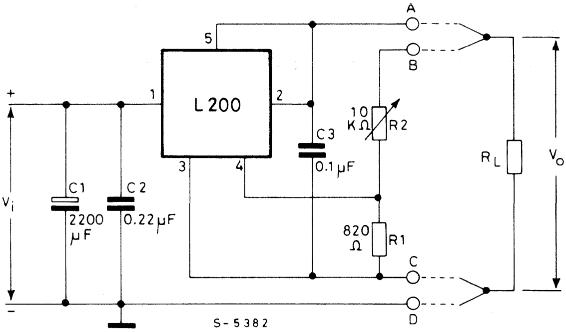

Fig. 38

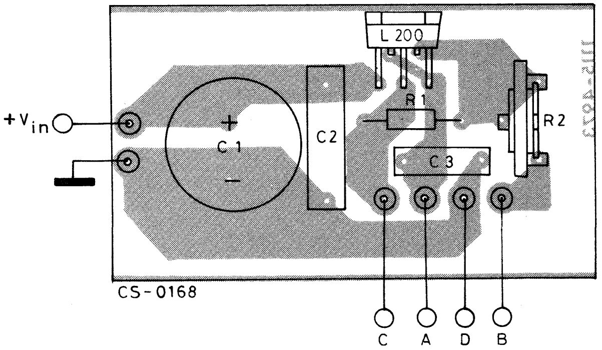

HEATSINK DIMENSIONING

The heatsink dissipates the heat produced by the device to prevent the internal temperature from reaching values which could be dangerous for device operation and reliability.

Integrated circuits in plastic package must never exceed 150°C even in the worst conditions. This limit has been set because the encapsulating resin has problems of vitrification if subjected to temperatures of more than 150°C for long periods or of more than 170°C for short periods (24 h). In any case the temperature accelerates the ageing process and therefore influences the device life; an increase of 10°C can halve the device life. A well designed heatsink should keep the junction temperature between 90°C and 110°C. Fig. 39 shows the structure of a power device. As demonstrated in thermodynamics, a thermal circuit can be considered to be an electrical circuit where R1, 2 represent the thermal resistance of the single elements (expressed in °C/W);

Fig. 39

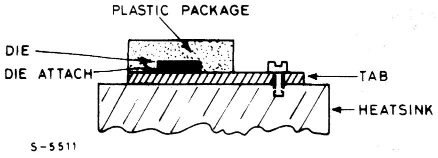

Fig. 40

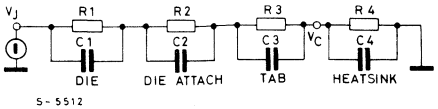

C1, 2 the thermal capacitance (expressed in °C/W)
I the dissipated power
V the temperature difference with respect to the reference (ground).

This circuit can be simplified as follows:

Fig. 41

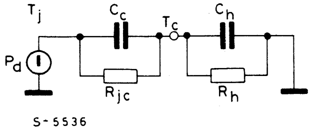

Where C_e is the thermal capacitance of the die plus that of the tab.

C_h is the thermal capacitance of the heatsink
R_{jc} is the junction case thermal resistance
R_h is the heatsink thermal resistance.

But since the aim of this section is not that of studing the transistors, the circuit can be further reduced.

Fig. 42

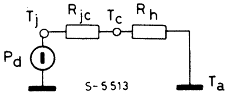

If we now consider the ground potential as ambient temperature, we have:

$$T_i = T_a + (R_{ic} + R_h)\,P_D \qquad (1)$$

$$R_h = \frac{T_i - T_a - R_{ic} \cdot P_d}{P_d} \qquad (1a)$$

$$T_c = T_a + R_h \cdot P_d \qquad (2)$$

For example, consider an application of the L200 with the following characteristics:

$$\left.\begin{array}{l} V_{in\,typ} = 20V \\ V_o = 14V \\ I_{o\,typ} = 1A \\ T_a = 40°C \end{array}\right\} \quad \text{typical conditions}$$

$$\left.\begin{array}{l} V_{in\,max} = 22V \\ V_o = 14V \\ I_{o\,max} = 1.2A \\ T_a = 60°C \end{array}\right\} \quad \text{overload conditions}$$

$P_{d\,typ} = (V_{in} - V_o) \cdot I_o = (20\text{-}14) \cdot 1 = 6W$
$P_{d\,max} = (22\text{-}14) \cdot 1.2 = 9.6W$

Imposing $T_j = 90°C$ of (1a) we get (from L200 characteristics we get $R_{j\text{-}c} = 3°C/W$)

$$R_h = \frac{90 - 40 - 3 \cdot 6}{6} = 5.3°C/W$$

Using the value thus obtained in (1), we get that the junction temperature during the overload goes to the following value:

$$T_j = 60 + (3 + 5.3) \cdot 9.6 = 140°C$$

If the overload occurs only rarely and for short periods, dimensioning can be considered to be correct. Obviously during the shortcircuit, the dissipated power reaches must higher values (about 40W for the case considered) but in this case the thermal protection intervenes to maintain the temperature below the maximum values allowed.

Note 1: If insulating materials are used between device and heatsink, the thermal contact resistance must be taken into account (0.5 to 1°C/W, depending on the type of insulant used) and the circuit in fig. 43 becomes:

Fig. 43

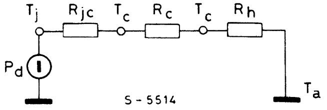

Note 2: In applications where one or more external transistors are used together with the L200, the dissipated power must be calculated for each component. The various junction temperatures can be calculated by solving the following circuit:

Fig. 44

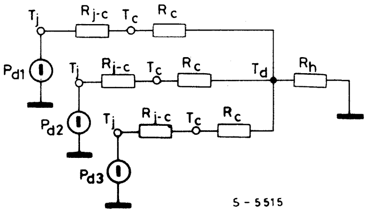

This applies if the various dissipating elements are fairly near to one another with respect to the heatsink dimensions, otherwise the heatsink can no longer be considered as a concentrated constant and the calculation becomes difficult.

This concept is better explained by the graph in fig. 45 which shows the case (and therefore junction) temperature variation as a function of the distance between two dissipating elements with the same type of dissipator and the same dissipated power. The graph in fig. 45 refers to the specific case of two elements dissipating the same power, fixed on a rectangular aluminium plate with a ratio of 3 between the two sides. The temperature jump will depend on the dissipated power and one the device geometry but we want to show that there exists an optimal position between the two devices:

$$d = \frac{1}{2} \cdot \text{side of the plate}$$

Fig. 46 shows the trend of the temperature as a function of the distance between two dissipating elements whose dissipated power is fairly different (ratio 1 to 4).

This graph may be useful in applications with the L200 + external transistor (in which the transistor generally dissipates more than the L200) where the temperature of the L200 has to be kept as low as possible and especially where the thermal protection of the L200 is to be used to limit the transistor temperature in the case of an overload or abnormal increase in the ambient temperature. In other words the distance between the two elements can be selected so that the power transistor reaches the $T_{j\,max}$ (200°C for a TO-3 transistor) when the L200 reaches the thermal protection intervention temperature.

Fig. 45

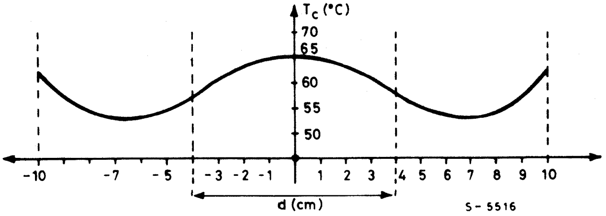

Fig. 46

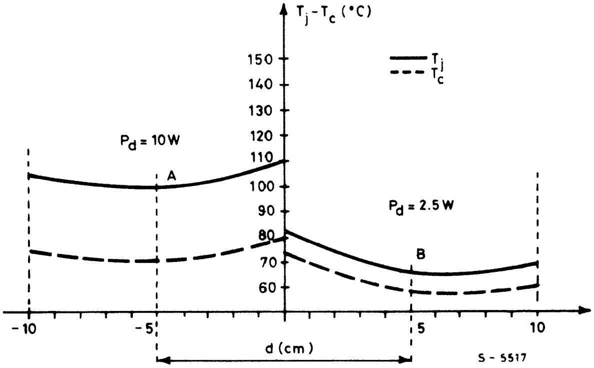

A : Position of the device with high power dissipation (10W)
B : Position of the device with low power dissipation (2.5W)

HANDLING AND MOUNTING OF PLASTIC POWER PACKAGES

Integrated circuits mounted in plastic power packages can be damaged, or reliability compromised, by inappropriate handling and mounting techniques. Avoiding these problems is simple if you follow the suggestions in this section.

Advances in power package design have made it possible to replace metal packages with more economical plastic packages in many high power applications. Most of SGS' power driver circuits, for example, are mounted in the innovative MULTIWATT® package, developed originally for high power audio amplifiers. Though the intrinsic reliability of these packages is now excellent the use of inappropriate techniques or unsuitable tools during mechanical handling can affect the long term reliability of the device, or even damage it. With a few simple precautions, careful designers and production engineers can eliminate these risks, saving both time and money.

BENDING AND CUTTING LEADS

The first danger area is bending and cutting the leads. In these processes it is important to avoid straining the package and particularly the area where the leads enter the encapsulating resin. If the package/lead interface is strained the resistance to humidity and thermal stress are compromised, affecting reliability.

There are five basic rules to bear in mind:

- Clamp the leads firmly between the package and the bend/cut point (figure 1).
- Bend the leads at least 3 mm from the package (figure 2a).
- Never bend the leads more than 90° and never bend more than once (figure 2b).
- Never bend the leads laterally (figure 2c).
- Make sure that the bending/cutting tool does not damage the leads.

Fig. 1 - Clamp the leads between the package and bend/cut point.

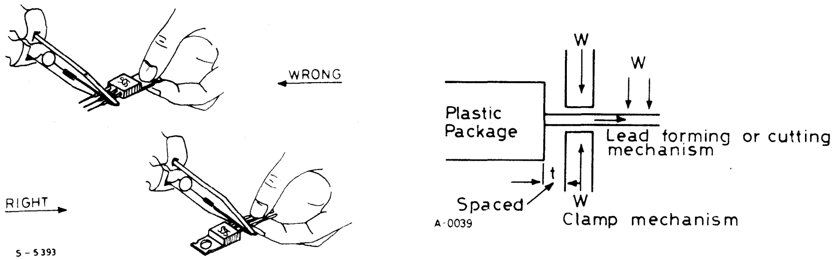

Fig. 2 - Bend the leads at least 3 mm. from the package, never bend leads more than 90° and never attempt to splay the leads out.

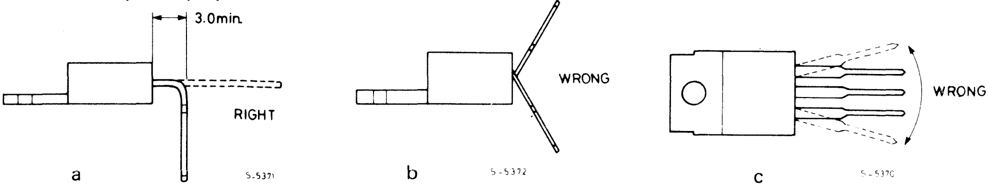

INSERTION

When mounting the IC on a printed circuit board the golden rule is, again, to avoid stress. In particular:

- Adhere to the specified pin spacing of the device; don't try to bend the leads to fit non-standard hole spacing.
- Leave a suitable space between the IC and the board. If necessary use a spacer.
- Take care to avoid straining the device after soldering. If a heatsink is used and it is mounted on the PC board it should be attached to the IC before soldering.

SOLDERING

The greater danger during soldering is overheating. If an IC is exposed to high temperature for an excessive period it may be damaged or reliability reduced.
Recommended soldering conditions are 260°C for ten seconds or 350°C for three seconds. Figure 3 shows the excess junction temperature of a PENTAWATT package for both methods.

It is also important to use suitable fluxes for the soldering baths to avoid deterioration of the leads or package resin. Residual flux between the leads or in contact with the resin must be removed to guarantee long term reliability. The solvent used to remove excess flux should be chosen with care. In particular, trichloroethylene ($CHCl : CCl_2$) – based solvents should be avoided because the residue can corrode the encapsulant resin.

Fig. 3 - The excess junction temperature of a PENTAWATT package in the suggested soldering conditions.

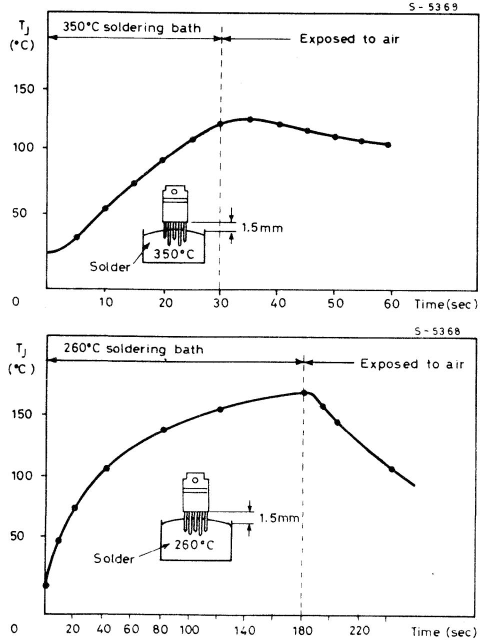

HEATSINK MOUNTING

To exploit the full capability of a power device a suitable heatsink must be used. The most important aspect from the point of view of reliability is that the heatsink is dimensioned to keep the junction temperature as low as possible. From a mechanical point of view, however, the heatsink must be designed so that it does not damage the IC. Care should also be taken in attaching the IC to the heatsink.

The contact thermal resistance between the device and the heatsink can be improved by adding a thin layer of silicon grease with sufficient fluidity to ensure uniform distribution. Figure 4 shows how the thermal resistance of a MULTIWATT package is improved by silicone grease.
An excessively thick layer or an excessively viscous silicon grease may have the opposite effect and could cause deformation of the tab.

Fig. 4 - The thermal resistance of a MULTIWATT package is improved by silicon grease. Here thermal resistance is plotted against grease thickness.

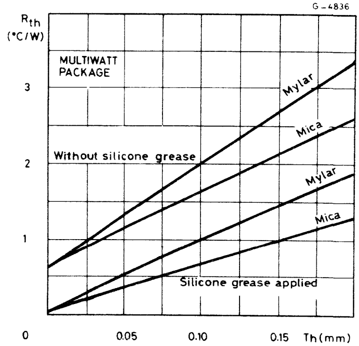

SGS plastic power packages – MULTIWATT, PENTAWATT and VERSAWATT – are attached to the heatsink with a single screw. A spring clip may also be used as shown in figure 5. The screw should be properly tightened to ensure that the package makes good contact with the heatsink. It should not be too tight or the tab may be deformed, breaking the die or separating the resin from the tab.

The appropriate tightening torque can be found by plotting thermal resistance against torque as shown in figure 6.
Suggested tightening torques for 3MA screws are 6 Kg/cm for VERSAWATT and PENTAWATT packages and 8 Kg/cm for MULTIWATT packages. If different screws, or sping clips, are used the force exerted by the tab must be equivalent to the force produced with these recommended torques.

Even if the screw is not overtightened the tab can be deformed, with disastrous results. If the surface of the heatsink is not sufficiently flat. The planarity of the contact surface between device and

Fig. 5 - MULTIWATT, PENTAWATT and VERSAWATT packages are attached to the heatsink with a single screw or a spring clip.

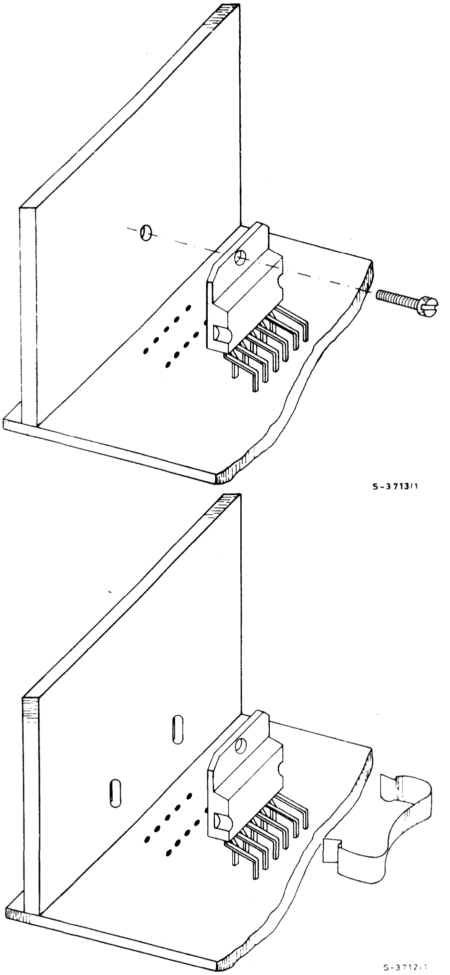

Fig. 6 - Contact thermal resistance depends on tightening torque.

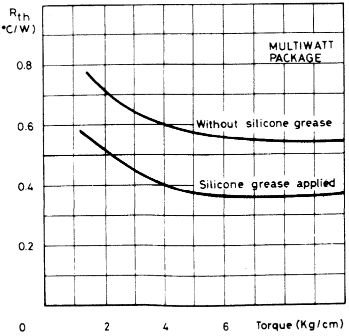

heatsink must be less than 10 µm for PENTAWATT and VERSAWATT packages and less than 20 µm for MULTIWATT packages.

Fig. 7 - The heatsink tab may be deformed if a washer or a wide-headed screw is not used.

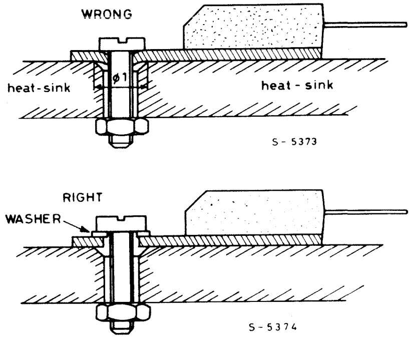

Similar problems may arise if the screwhead is too narrow compared to the hole in the heatsink (figure 7).

The solution here is to use a washer to distribute the pressure over a wider area. An alternative is to use screws of the type shown in figure 8 which have a wide flat head. When self-tapping screws are used it is also important to provide an outlet for the material deformed as the thread is formed. Poor contact will result if this is not done. Another possible hazard arises when the hole in the heatsink is formed with a punch: a circular depression may be formed around the hole, leading to deformation of the tab. This may be cured by using a washer or by modifying the punch.

Fig. 8 - The recommended screw type looks like this.

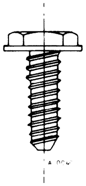

Serious reliability problems can be encountered if the heatsink and plrinted circuit board are not rigidly connected. Either the heatsink must be rigidly attached to the printed circuit board or both must be securely attached to the chassis. If this is not done the stresses and strains induced by vibration will be applied to the device and in particular to the lead/resin interface. This problem is more likely to arise when large boards and large heatsinks are used or whenever the equipment is subjected to heavy vibrations.

DATASHEETS

L149

LINEAR INTEGRATED CIRCUITS

4A LINEAR DRIVER

- HIGH OUTPUT CURRENT (4A peak)
- HIGH CURRENT GAIN (10 000 TYP.)
- OPERATION UP TO ± 20V
- THERMAL PROTECTION
- SHORT CIRCUIT PROTECTION
- OPERATION WITHIN SOA
- HIGH SLEW-RATE (30V/μs)

The L149 is a general purpose power booster in Pentawatt® package consisting of a quasi-complementary darlington output stage with the associated biasing system and inhibit facility.
The device is partidularly suited for use with an operational amplifier inside a closed loop configuration to increase output current.

ABSOLUTE MAXIMUM RATINGS

V_s	Supply voltage	± 20	V
V_i	Input voltage	V_s	
→ $V_5 - V_4$	Upper power transistor V_{CE}	40	V
→ $V_4 - V_3$	Lower power transistor V_{CE}	40	V
I_o	DC output current	3	A
I_o	Peak output current (internally limited)	4	A
V_{INH}	Input inhibit voltage	$-V_s +5$	V
		$-V_s -1.5$	V
P_{tot}	Power dissipation at $T_{case} = 75°C$	25	W
T_{stg}, T_j	Storage and junction temperature	-40 to 150	°C

ORDERING NUMBER: L149V

MECHANICAL DATA

Dimensions in mm

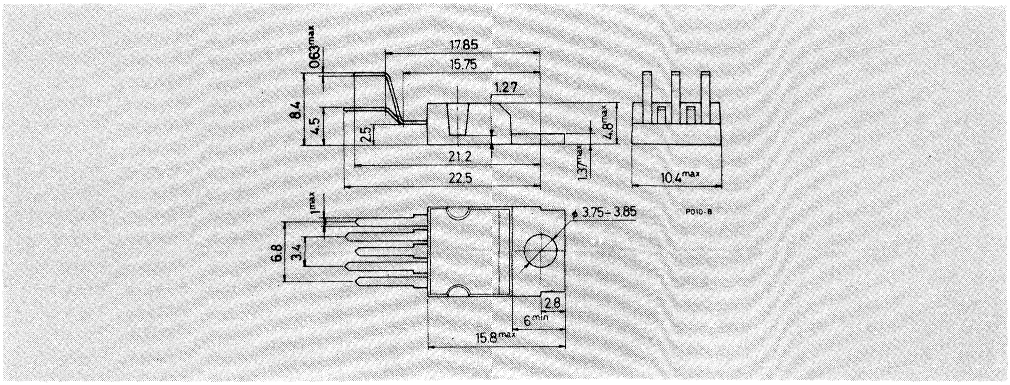

→ *Supersedes issue dated 3/83*

CONNECTION DIAGRAM (top view)

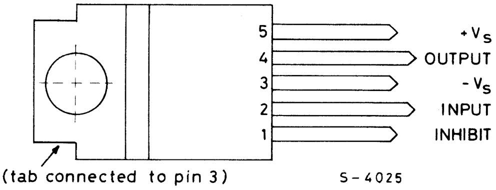

SCHEMATIC DIAGRAM

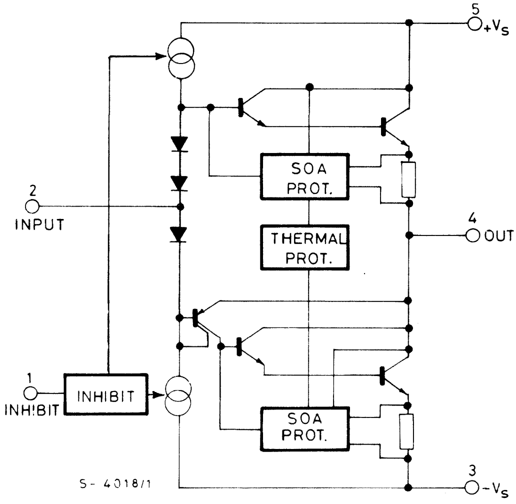

THERMAL DATA

$R_{th\ j\text{-}case}$	Thermal resistance junction-case	max	3	°C/W

ELECTRICAL CHARACTERISTICS ($T_j = 25°C$, $V_s = \pm 16V$)

Parameter		Test conditions	Min.	Typ.	Max.	Unit
V_s	Supply voltage				± 20	V
I_d	Quiescent drain current	$V_s = \pm 16V$		30		mA
I_{in}	Input current	$V_s = \pm 16V$ $V_i = 0V$		200	400	μA
h_{FE}	DC current gain	$V_s = \pm 16V$ $I_o = 3A$	6000	10000		—
G_v	Voltage gain	$V_s = \pm 16V$ $I_o = 1.5A$		1		—
V_{CEsat}	Saturation voltage (for each transistor)	$I_o = 3A$			3.5	V
V_{os}	Input offset voltage	$V_s = \pm 16V$			0.3	V
V_{INH}	Inhibit input voltage (pins 1-3)	ON condition			± 0.3	V
		OFF condition	± 1.8			
R_{INH}	Inhibit input resistance			2.0		KΩ
SR	Slew rate			30		V/μs
B	Power bandwidth	$V_o = \pm 10V$, d = 1%, $R_L = 8Ω$		200		KHz

TEST CIRCUIT

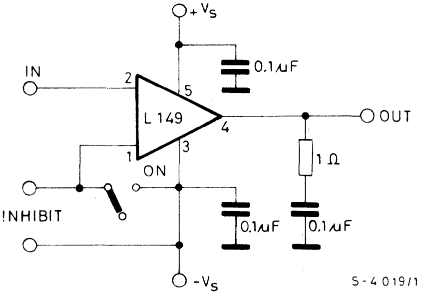

Fig. 1 - Maximum saturation voltage vs. output current

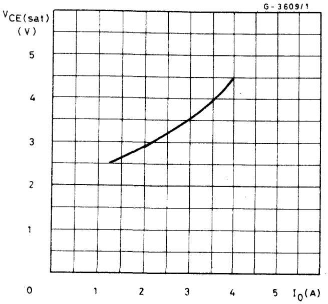

Fig. 2 - Current limiting characteristics

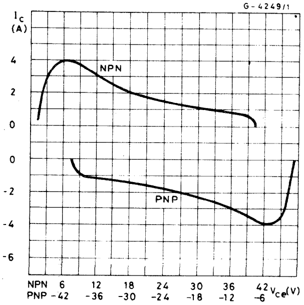

Fig. 3 - Supply voltage rejection vs. frequency

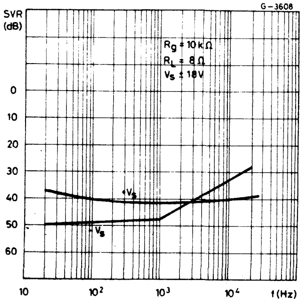

APPLICATION INFORMATION

Fig. 4 - High slew-rate power operational amplifier

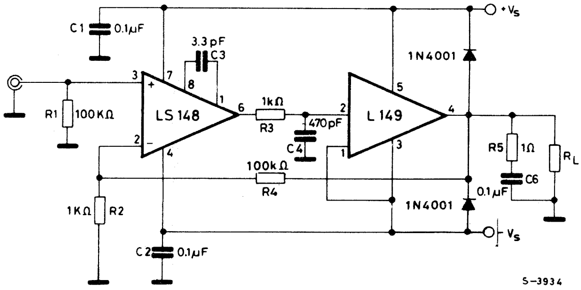

Fig. 5 - Distortion vs. output power (f = 1 KHz)

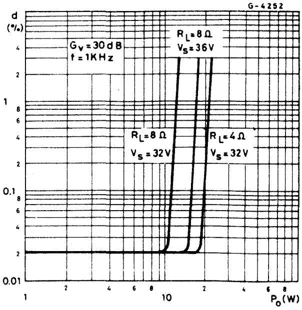

Fig. 6 - Distortion vs. output power (f= 10 KHz)

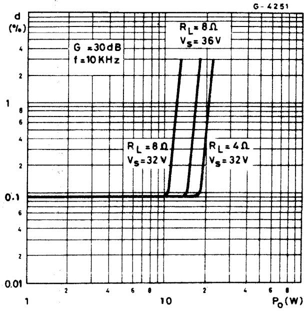

Fig. 7 - Output power vs. supply voltage

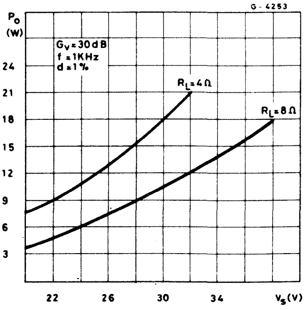

APPLICATION INFORMATION (continued)

Fig. 8 - Electronic potentiometer (short-circuit protected)

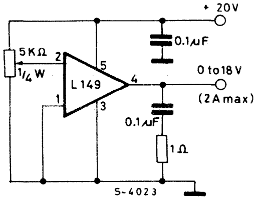

Fig. 9 - 720W Switch-Mode Power Supply using the L149 as driver stage for the power transistors

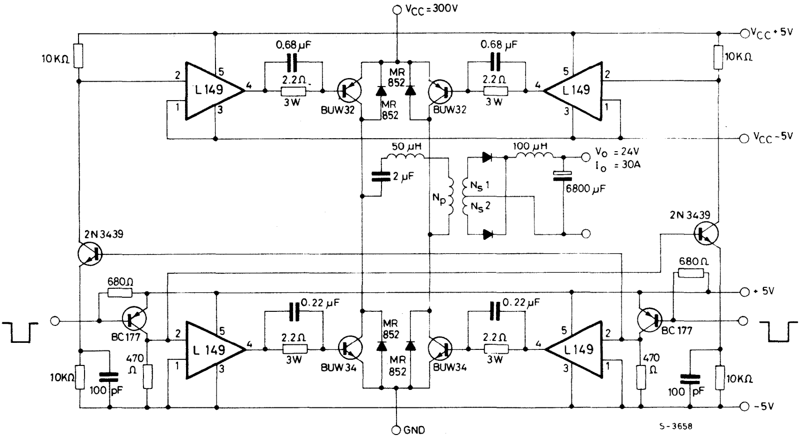

SGS **L165**

LINEAR INTEGRATED CIRCUITS

3A POWER OPERATIONAL AMPLIFIER

- OUTPUT CURRENT UP TO 3A
- LARGE COMMON-MODE AND DIFFERENTIAL MODE RANGES
- SOA PROTECTION
- THERMAL PROTECTION
- ±18V SUPPLY
- PENTAWATT PLASTIC PACKAGE

The L165 is a monolithic integrated circuit in Pentawatt® package, intended for use as power operational amplifier in a wide range of applications, including servo amplifiers and power supplies. The high gain and high output power capability provide superior performance wherever an operational amplifier/ power booster combination is required.

ABSOLUTE MAXIMUM RATINGS

V_s	Supply voltage	± 18	V
→ $V_5 - V_4$	Upper power transistor V_{CE}	36	V
→ $V_4 - V_3$	Lower power transistor V_{CE}	36	V
V_i	Input voltage	V_s	
V_i	Differential input voltage	± 15	V
I_o	Peak output current (interanlly limited)	3.5	A
P_{tot}	Power dissipation at T_{case} = 90°C	20	W
T_{stg}, T_j	Storage and junction temperature	-40 to 150	°C

ORDERING NUMBER: L165V

MECHANICAL DATA

Dimensions in mm

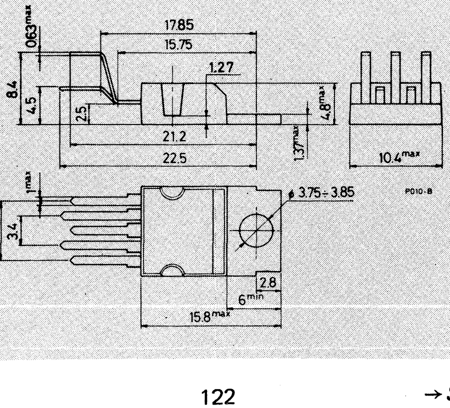

1/84

→ *Supersedes issue dated 3/83*

CONNECTION DIAGRAM

(top view)

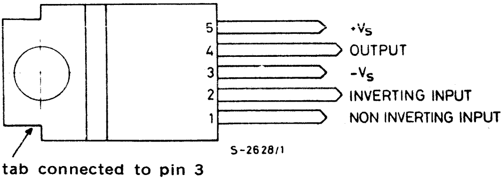

SCHEMATIC DIAGRAM

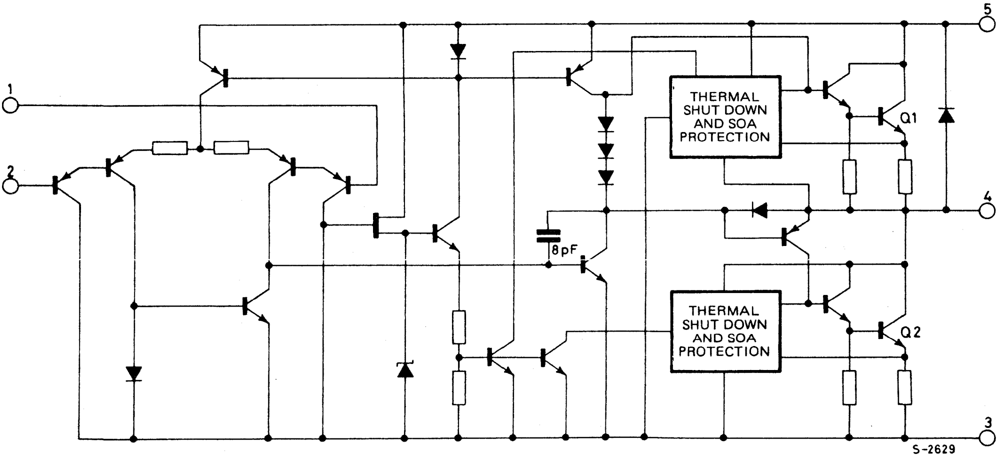

THERMAL DATA

$R_{th\ j\text{-}case}$	Thermal resistance junction-case	max	3	°C/W

ELECTRICAL CHARACTERISTICS (V_s = ± 15V, T_j = 25°C unless otherwise specified)

Parameter		Test conditions	Min.	Typ.	Max.	Unit
V_s	Supply voltage		± 6		±18	V
I_d	Quiescent drain current	V_s = ± 18V		40	60	mA
I_b	Input bias current			0.2	1	μA
V_{os}	Input offset voltage			± 2	±10	mV
I_{os}	Input offset current			±20	±200	nA
SR	Slew-Rate	G_v= 10		8		V/μs
		G_v= 1 (°)		6		
V_o	Output voltage swing	f = 1 kHz I_p = 0.3A I_p = 3A		27 24		V_{pp}
		f = 10 kHz I_p = 0.3A I_p = 3A		27 23		V_{pp}
R_i	Input resistance (pin 1)	f = 1 KHz	100	500		KΩ
G_v	Voltage gain (open loop)			80		dB
e_N	Input noise voltage	B = 10 to 10 000 Hz		2		μV
i_N	Input noise current			100		pA
CMR	Common mode rejection	$R_g \leq 10$ KΩ G_v= 30 dB		70		dB
SVR	Supply voltage rejection	R_g= 22 kΩ V_{ripple}= 0.5 V_{rms} f_{ripple}= 100 Hz G_v = 10		60		dB
		G_v = 100		40		dB
η	Efficiency	f = 1 kHz R_L= 4Ω I_p = 1.6A; P_o = 5W		70		%
		I_p = 3A; P_o = 18W		60		%
T_{sd}	Thermal shut-down case temperature	P_{tot}= 12W		110		°C
		P_{tot}= 6W		130		

(°) Circuit of fig. 8.

Fig. 1 - Open loop frequency response

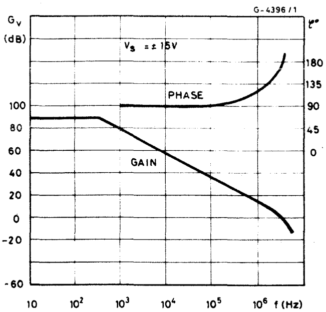

Fig. 2 - Closed-loop frequency response (circuit of fig. 8)

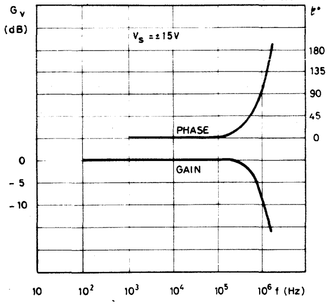

Fig. 3 - Large signal frequency response

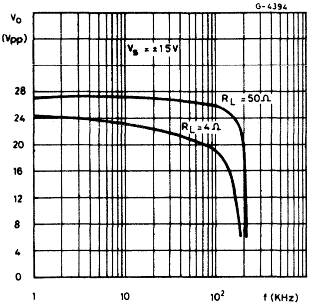

Fig. 4 - Maximum output current vs. voltage [V_{CE}] across each output transistor

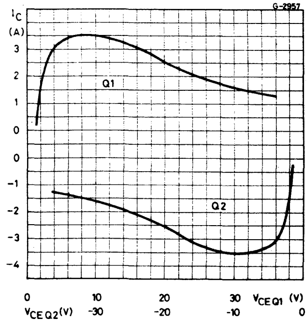

Fig. 5 - Safe operating area and collector characteristics of the protected power transistor

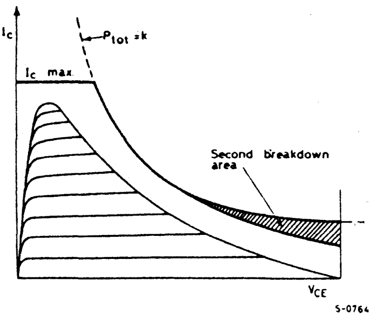

Fig. 6 - Maximum allowable power dissipation vs. ambient temperature

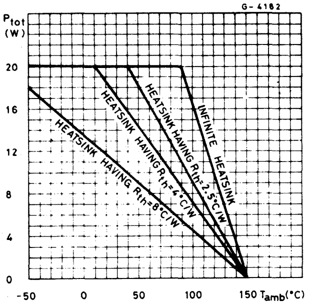

Fig. 7 - Application circuit ($G_V > 10$)

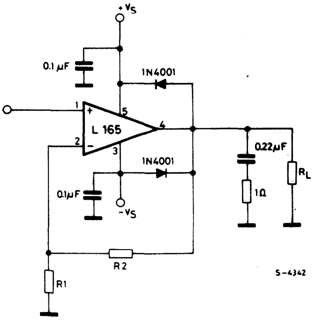

Fig. 8 - Unity gain configuration

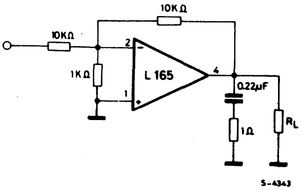

Fig. 9 - Motor current control circuit with external power transistors ($I_{motor} > 3.5A$)

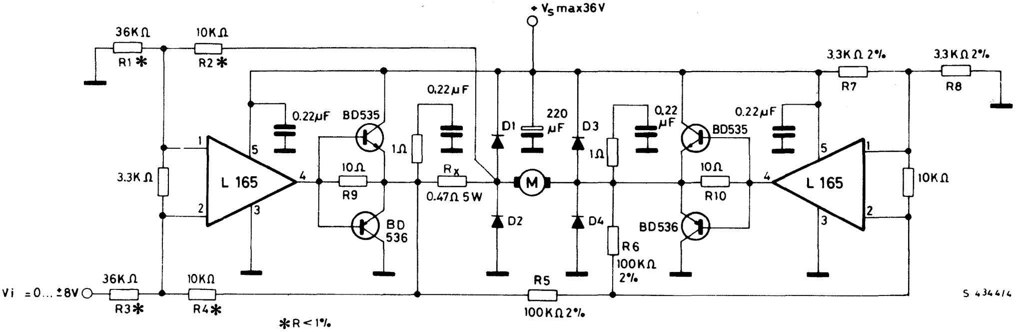

D1 to D4 : { $V_F \leqslant 1.2V$ @ I = 4A
trr ⩽ 500 ns

Note: The input voltage level is compatible with L291 (5-BIT D/A converter).

The transfer function is : $\frac{I_M}{V_i} = \frac{R4}{Rx\ R3}$

Fig. 10 - High current tracking regulator

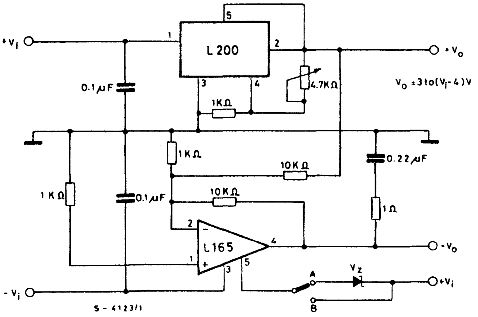

A: for ± 18 ⩽ V_i ⩽ ± 32

Note — V_z must be chosen in order to verify $2 V_i - V_z \leqslant 36V$

B: for V_i ⩽ ± 18V

Fig. 11 - Bidirectional speed control of DC motor (Compensation networks not shown)

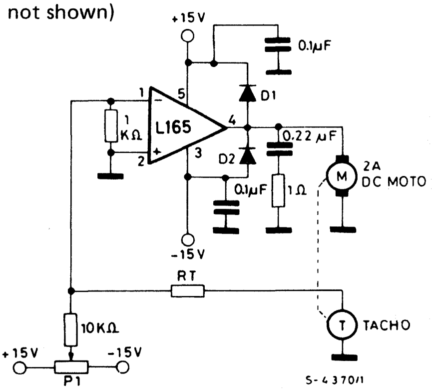

D1, D2 : { $V_F \leqslant 1.2V$ @ I = 2A
trr ⩽ 500 ns

Fig. 12 - Split power supply

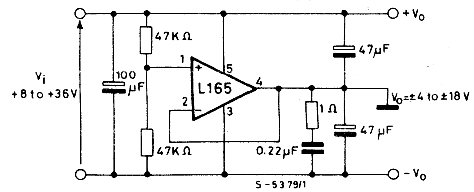

Fig. 13 - Power squarewave oscillator with independent adjustments for frequency and duty-cycle.

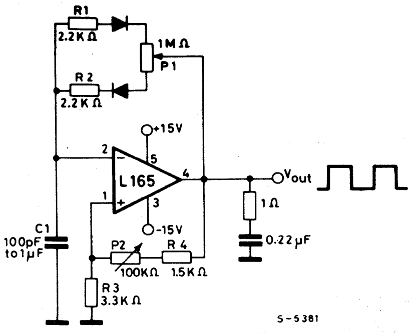

P1 : duty-cycle adjust
P2 : frequency adjust (f = 700 Hz with C1= 10 nF, P2= 100 KΩ, f=25 Hz with C1= 10 nF, P2= 0)

Fig. 14 - Bidirectional DC motor control with TTL/C-MOS/μP compatible inputs

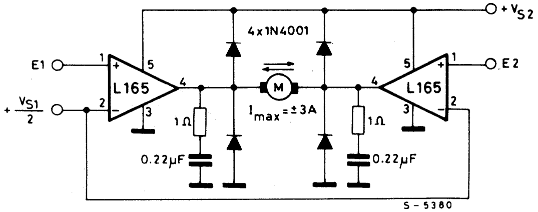

V_{S1} = logic supply voltage

Must be $V_{S2} \geqslant V_{S1}$

E1, E2 = logic inputs

SGS **L200**

LINEAR INTEGRATED CIRCUITS

ADJUSTABLE VOLTAGE AND CURRENT REGULATOR

- ADJUSTABLE OUTPUT CURRENT UP TO 2A (GUARANTEED UP TO T_j= 150°C)
- ADJUSTABLE OUTPUT VOLTAGE DOWN TO 2.85V
- INPUT OVERVOLTAGE PROTECTION (UP TO 60V, 10 ms)
- SHORT CIRCUIT PROTECTION
- OUTPUT TRANSISTOR S.O.A. PROTECTION
- THERMAL OVERLOAD PROTECTION
- LOW BIAS CURRENT ON REGULATION PIN
- LOW STANDBY CURRENT DRAIN

The L200 is a monolithic integrated circuit for voltage and current programmable regulation. It is available in Pentawatt® package or 4-lead TO-3 metal case. Current limiting, power limiting, thermal shutdown and input overvoltage protection (up to 60V) make the L200 virtually blowout proof. The L200 can be used to replace fixed voltage regulators when high output voltage precision is required and eliminates the need to stock a range of fixed voltage regulators.

ABSOLUTE MAXIMUM RATINGS

V_i	DC input voltage	40	V
V_i	Peak input voltage (10 ms)	60	V
ΔV_{i-o}	Dropout voltage	32	V
I_o	Output current	internally limited	
P_{tot}	Power dissipation	internally limited	
T_{stg}	Storage temperature	-55 to 150	°C
T_{op}	Operating junction temperature for L200C	-25 to 150	°C
	for L200	-55 to 150	°C

MECHANICAL DATA

Dimensions in mm

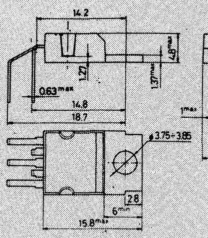

Pentawatt H

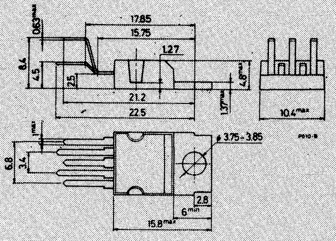

Pentawatt V

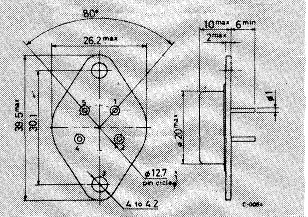

TO-3

CONNECTION DIAGRAMS AND ORDERING NUMBERS

(top views)

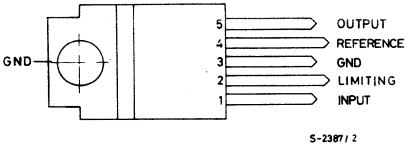

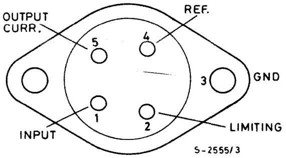

Type	Pentawatt®	TO-3
L 200		L 200 T
L 200 C	L 200 CH L 200 CV	L 200 CT

BLOCK DIAGRAM

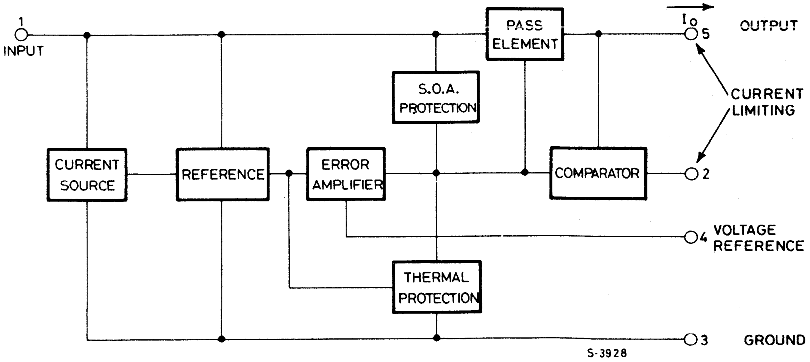

SCHEMATIC DIAGRAM

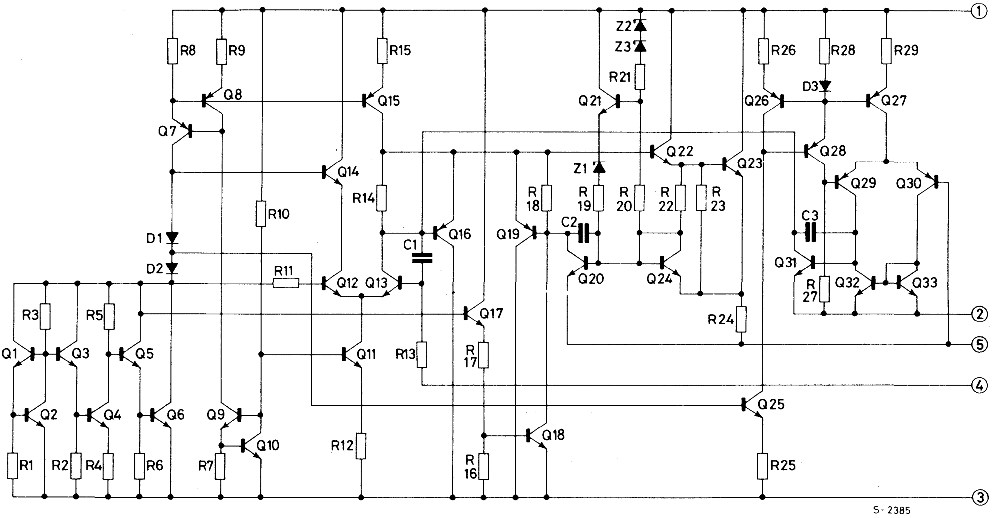

THERMAL DATA			TO-3	Pentawatt®
$R_{th\ j\text{-}case}$	Thermal resistance junction-case	max	4 °C/W	3 °C/W
$R_{th\ j\text{-}amb}$	Thermal resistance junction-ambient	max	35 °C/W	50 °C/W

ELECTRICAL CHARACTERISTICS (T_{amb}= 25°C, unless otherwise specified)

Parameter		Test conditions	Min.	Typ.	Max.	Unit
VOLTAGE REGULATION LOOP						
I_d	Quiescent drain current (pin 3)	V_i = 20V		4.2	9.2	mA
e_N	Output noise voltage	V_o= V_{ref} I_o= 10 mA B = 1 MHz		80		μV
V_o	Output voltage range	I_o = 10 mA	2.85		36	V
$\frac{\Delta V_o}{V_o}$	Voltage load regulation (note 1)	ΔI_o= 2A ΔI_o= 1.5A		0.15 0.1	1 0.9	% %
$\frac{\Delta V_i}{\Delta V_o}$	Line regulation	V_o= 5V V_i = 8 to 18V	48	60		dB
SVR	Supply voltage rejection	V_o= 5V I_o= 500 mA ΔV_i= 10 V_{pp} f = 100 Hz (note 2)	48	60		dB

ELECTRICAL CHARACTERISTICS (continued)

Parameter		Test conditions	Min.	Typ.	Max.	Unit
ΔV_{i-o}	Droupout voltage between pins 1 and 5	$I_o = 1.5A$ $\Delta V_o \leqslant 2\%$		2	2.5	V
V_{ref}	Reference voltage (pin 4)	$V_i = 20V$ $I_o = 10\ mA$	2.64	2.77	2.86	V
ΔV_{ref}	Average temperature coefficient of reference voltage	$V_i = 20V$ $I_o = 10\ mA$ for $T_j = -25$ to 125°C for $T_j =$ 125 to 150°C		 -0.25 -1.5		 mV/°C mV/°C
I_4	Bias current at pin 4			3	10	μA
$\frac{\Delta I_4}{\Delta T \cdot I_4}$	Average temperature coefficient (pin 4)			-0.5		%/°C
Z_o	Output impedance	$V_i = 10V$ $V_o = V_{ref}$ $I_o = 0.5A$ $f = 100\ Hz$		1.5		mΩ

CURRENT REGULATION LOOP

V_{SC}	Current limit sense voltage between pins 5 and 2	$V_i = 10V$ $V_o = V_{ref}$ $I_5 = 100\ mA$	0.38	0.45	0.52	V
$\frac{\Delta V_{sc}}{\Delta T \cdot V_{sc}}$	Average temperature coefficient of V_{SC}			0.03		%/°C
$\frac{\Delta I_o}{I_o}$	Current load regulation	$V_i = 10V$ $\Delta V_o = 3V$ $I_o = 0.5A$ $I_o = 1A$ $I_o = 1.5A$		 1.4 1 0.9		 % % %
I_{sc}	Peak short circuit current	$V_i - V_o = 14V$ (pins 2 and 5 short circuited)			3.6	A

Note 1): A load step of 2A can be applied provided that input-output differential voltage is lower than 20V (see fig. 1).

Note 2): The same performance can be maintained at higher output levels if a bypassing capacitor is provided between pins 2 and 4.

Fig. 1 - Typical safe operating area protection

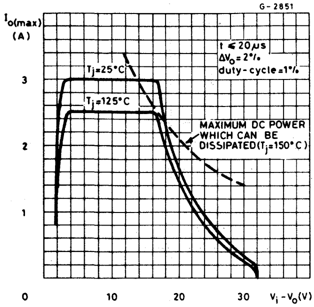

Fig. 2 - Quiescent current vs. supply voltage

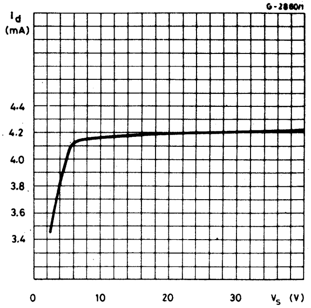

Fig. 3 - Quiescent current vs. junction temperature

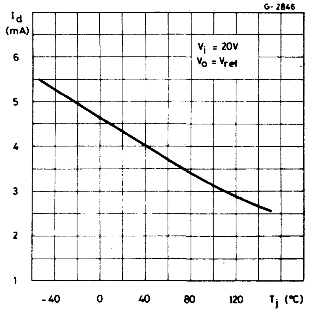

Fig. 4 - Quiescent current vs. output current

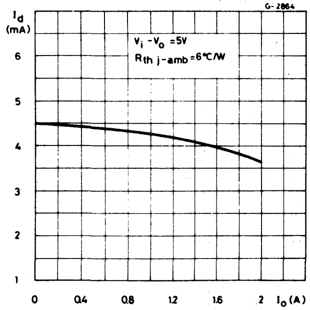

Fig. 5 - Output noise voltage vs. output voltage

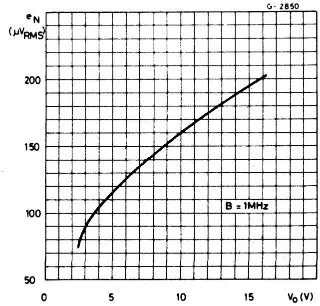

Fig. 6 - Output noise voltage vs. frequency

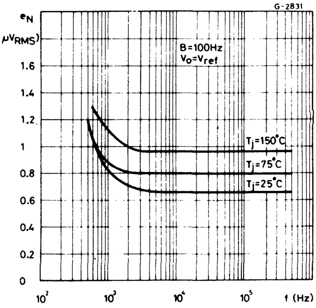

Fig. 7 - Reference voltage vs. junction temperature

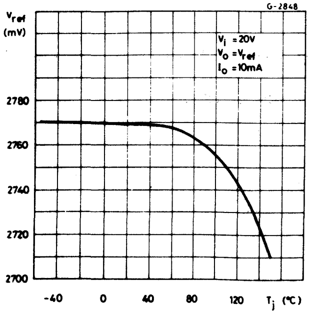

Fig. 8 - Voltage load regulation vs. junction temperature

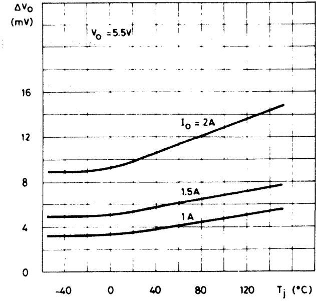

Fig. 9 - Supply voltage rejection vs. frequency

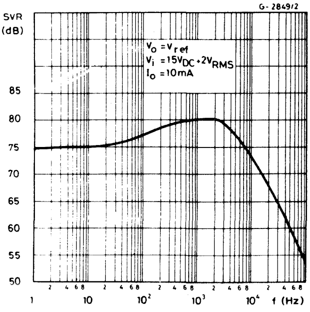

Fig. 10 - Dropout voltage vs. junction temperature

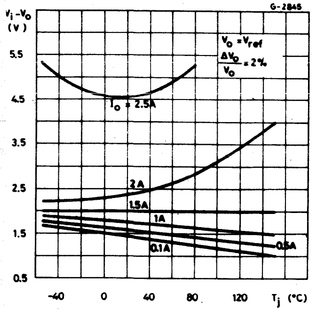

Fig. 11 - Output impedance vs. frequency

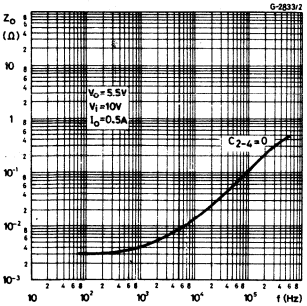

Fig. 12 - Output impedance vs. output current

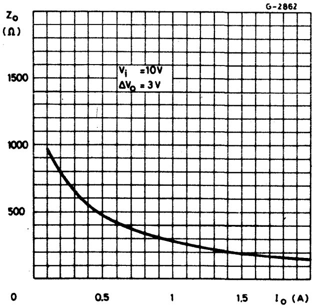

Fig. 13 - Voltage transient response

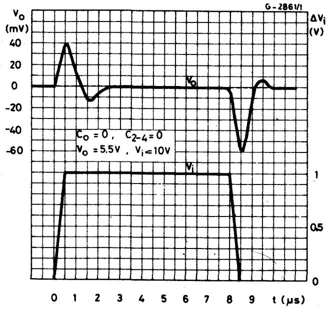

Fig. 14 - Load transient response

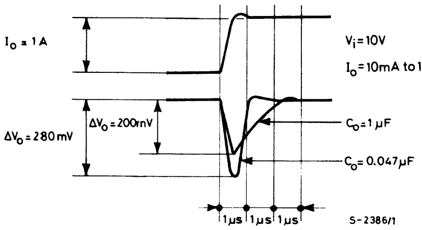

Fig. 15 - Load transient response

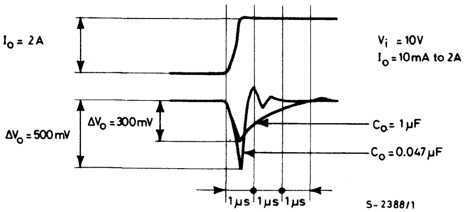

Fig. 16 - Current limit sense voltage vs. junction temperature

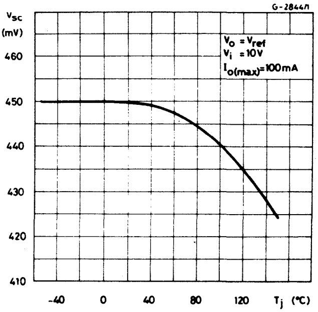

APPLICATION CIRCUITS

Fig. 17 – Programmable voltage regulator

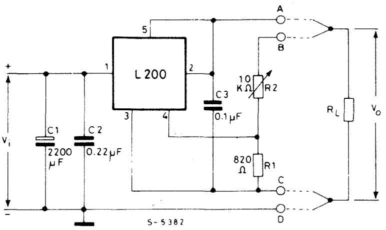

Fig. 18 – P.C. board and components layout of fig. 17. (1 : 1 scale)

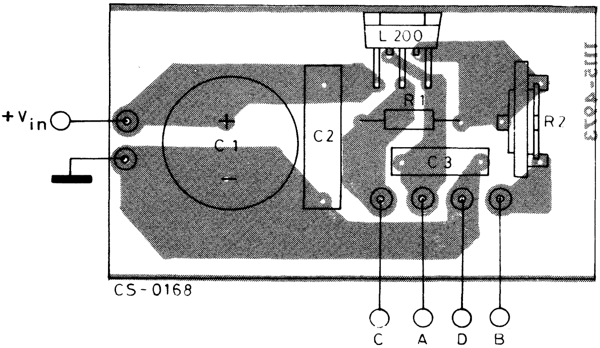

Fig. 19 – Programmable voltage regulator with current limiting

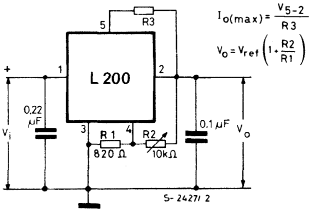

Fig. 20 – Programmable current regulator

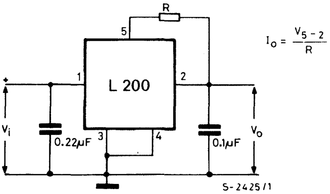

Fig. 21 – High current voltage regulator with short circuit protection

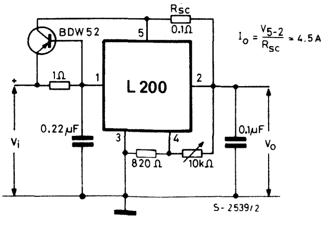

Fig. 22 – Digitally selected regulator with inhibit

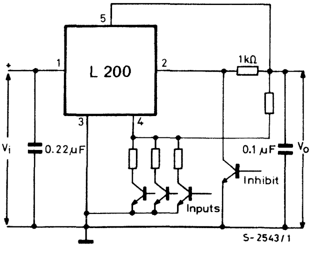

APPLICATION CIRCUITS

Fig. 23 - Tracking voltage regulator

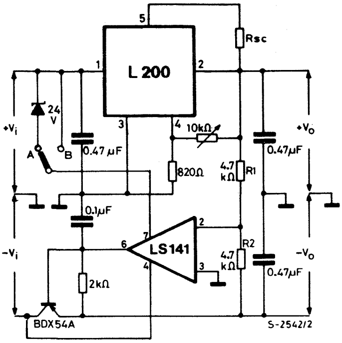

A : $V_{i(max)} \leqslant \pm 34V$; $3 < V_o < 30$.
B : $V_{i(max)} \leqslant \pm 22V$; $3 < V_o < 18$.

Fig. 25 - High current tracking regulator

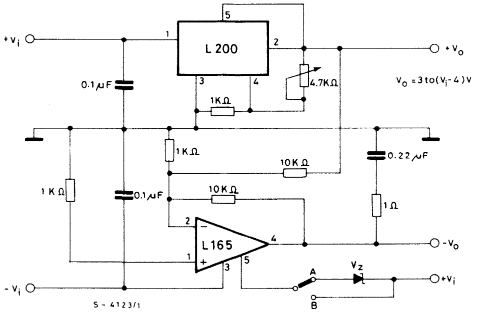

A: for $\pm 18 \leqslant V_i \leqslant \pm 32$

Note — V_Z must be chosen in order to verify $2\,V_i - V_Z \leqslant 36V$

B: for $V_i \leqslant \pm 18V$

Fig. 24 - High current regulator with NPN pass transistor

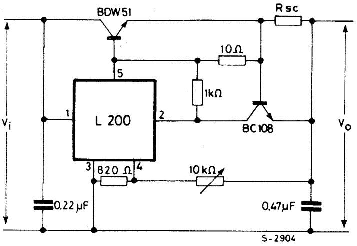

Fig. 26 - High input and output voltage

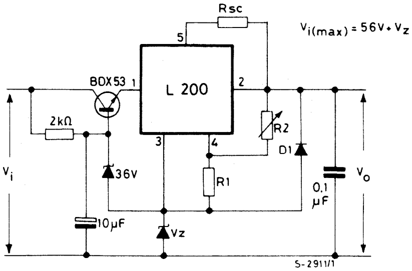

APPLICATION CIRCUITS (continued)

Fig. 27 - Constant current battery charger

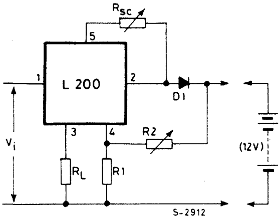

The resistors R_1 and R_2 determine the final charging voltage and R_{sc} the initial charging current. D_1 prevents discharge of the battery throught the regulator.

The resistor R_L limits the reverse currents through the regulator (which should be 100 mA max) when the battery is accidentally reverse connected. If R_L is in series with a bulb of 12V/50 mA rating this will indicate incorrect connection.

Fig. 28 - 30W Motor speed control

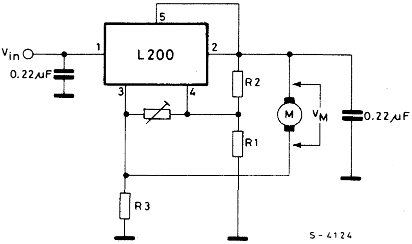

$$R_3 = \frac{R_1}{R_2} \cdot R_M$$

$$V_M = V_{ref} \cdot (1 + \frac{R_2}{R_1})$$

Fig. 29 - Low turn on

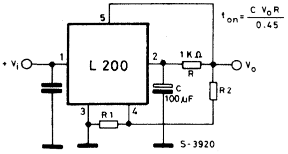

$$t_{on} = \frac{C\ V_o R}{0.45}$$

Fig. 30 - Light controller

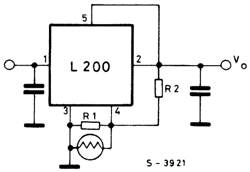

LINEAR INTEGRATED CIRCUITS

L201 L202
L203 L204

DARLINGTON ARRAYS

- SEVEN DARLINGTONS PER PACKAGE
- OUTPUT CURRENT 500 mA PER DRIVER (600 mA peak)
- OUTPUT VOLTAGE 50V
- INTEGRAL SUPPRESSION DIODES FOR INDUCTIVE LOADS
- OUTPUTS CAN BE PARALLELED FOR HIGHER CURRENT
- TTL/CMOS/PMOS/DTL COMPATIBLE INPUTS
- INPUTS PINNED OPPOSITE OUTPUTS TO SIMPLIFY LAYOUT

The L201, L202, L203 and L204 are high voltage, high current darlington arrays each containing seven open collector darlington pairs with common emitters. Each channel is rated at 500 mA and can withstand peak currents of 600 mA. Suppression diodes are included for inductive load driving and the inputs are pinned opposite the outputs to simplify board layout.

The four versions interface to all common logic families:

L201	General purpose, DTL, TTL, PMOS, CMOS
L202	14-25V PMOS
L203	5V TTL, CMOS
L204	6 - 15V CMOS, PMOS

These versatile devices are useful for driving a wide range of loads including solenoids, relays DC motors, LED displays, filament lamps, thermal printheads and high power buffers.
The L201, L202, L203 and L204 are supplied in 16 pin plastic DIP packages with a copper leadframe to reduce thermal resistance.

ABSOLUTE MAXIMUM RATINGS

V_i	Input voltage (for **L 202, L 203** and **L 204**)	30	V
V_o	Output voltage (collector-emitter)	50	V
$V_{CEO(sus)}$	Collector-emitter sustaining voltage	36	V
I_C	Collector current	500	mA
I_B	Base current (for **L 201** only)	25	mA
P_{tot}	Total power dissipation at $T_{amb} = 25°C$	1.8	W
T_{op}	Operating junction temperature	-25 to 150	°C
T_{stg}	Storage temperature	-55 to 150	°C

ORDERING NUMBERS: L201B-4, L203B-4
L202B-4, L204B-4

MECHANICAL DATA

Dimensions in mm

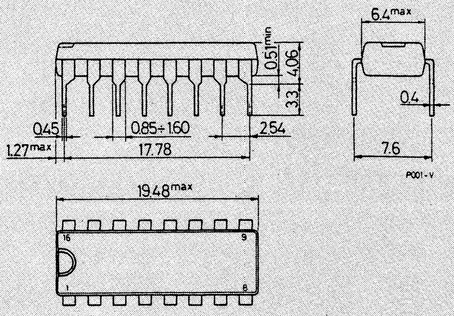

3/83

CONNECTION DIAGRAM (top view)

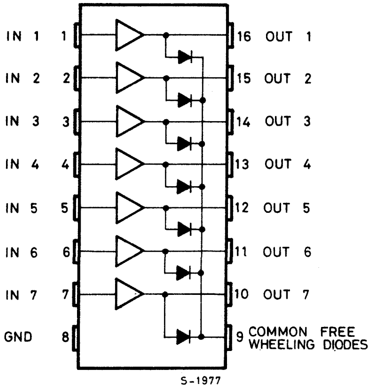

SCHEMATIC DIAGRAM

For L 201

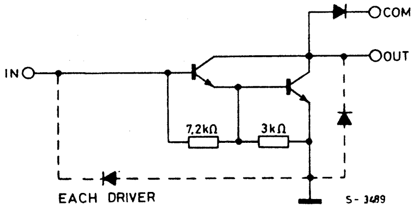

For L 202

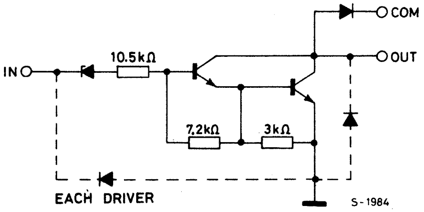

For L 203

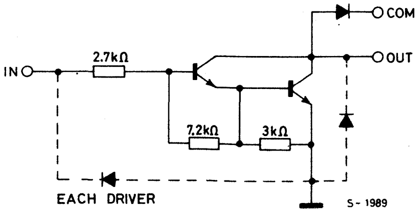

For L 204

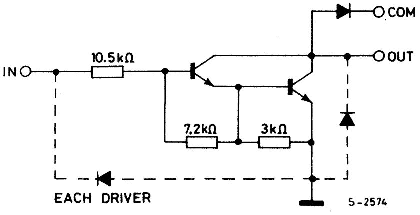

THERMAL DATA

$R_{th\ j\text{-}amb}$	Thermal resistance junction-ambient	max.	70	°C/W

ELECTRICAL CHARACTERISTICS (T_{amb} = 25°C, unless otherwise specified)

Parameter		Test conditions	Min.	Typ.	Max.	Unit	Fig. No.
I_{CEX}	Collector cutoff current	for **L 201** V_{CE} = 50V		0.2	3	μA	1
		for **L 202** V_{CE} = 50V V_i = 7V		0.2	3	μA	2
		for **L 203, L 204** V_{CE} = 50V I_i = 0		0.2	3	μA	1
$V_{CE(sat)}$	Collector-emitter saturation voltage	I_C = 350 mA I_B = 500 μA		1.25	1.6	V	3
		I_C = 200 mA I_B = 350 μA		1	1.3	V	
		I_C = 100 mA I_B = 250 μA		0.85	1.1	V	
I_i	Input current	for **L 202** V_i = 17V		0.75	1.3	mA	5
		for **L 203** V_i = 3.85V		0.9	1.35	mA	
		for **L 204** V_i = 5V		0.35	0.5	mA	
		V_i = 12V		1.1	1.45	mA	
$I_{C(off)}$		V_{CE} = 50V I_i = 25 μA			25	μA	4
V_i	Input voltage	for **L 202** I_C = 300 mA V_{CE} = 2V		10.5	13	V	7
		for **L 203** I_C = 300 mA V_{CE} = 2V		1.8	3	V	
		I_C = 250 mA V_{CE} = 2V		1.7	2.4	V	
		for **L 204** V_{CE} = 2V I_C = 200 mA		4.5	6	V	
		V_{CE} = 2V I_C = 350 mA		5	8	V	
h_{FE}	DC current gain (for **L 201** only)	I_C = 350 mA V_{CE} = 2V	1000	3000		–	3
I_R	Parallel diode reverse current	V_R = 50V		0.5	50	μA	6
V_F	Parallel diode forward voltage	I_F = 350 mA		1.4	2	V	8
t_{PLH}	Turn-on delay time	0.5 V_i to 0.5 V_o			5	μs	–
t_{PHL}	Turn-off delay time	0.5 V_i to 0.5 V_o			5	μs	–

TEST CIRCUITS

Fig 1 - For L 201, L 203 and L 204

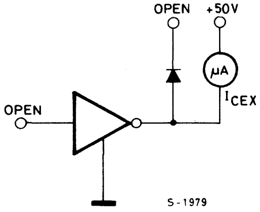

Fig. 2 - For L 202

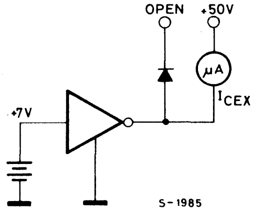

Fig. 3 - For L 201, L 202, L 203 and L 204

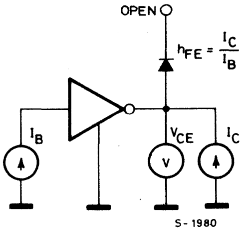

Fig. 4 - For L 201, L 202, L 203 and L 204

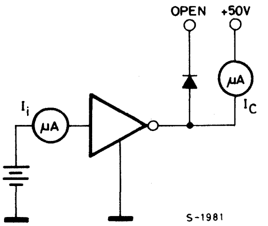

Fig. 5 - For L 202, L 203, and L 204

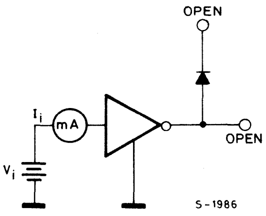

Fig. 6 - For L 201, L 202, L 203 and L 204

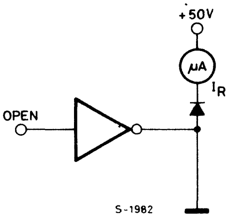

Fig. 7 - For L 202, L 203, and L 204

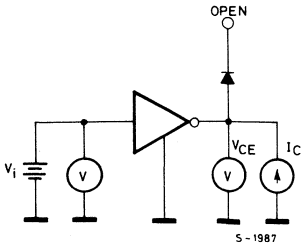

Fig. 8 - For L 201, L 202, L 203 and L 204

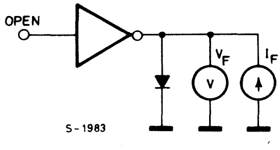

APPLICATION CIRCUITS

PMOS to load
(L 202 and L 204)

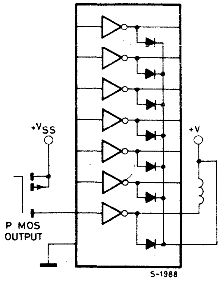

Buffer for high current load
(L 203 and L 204)

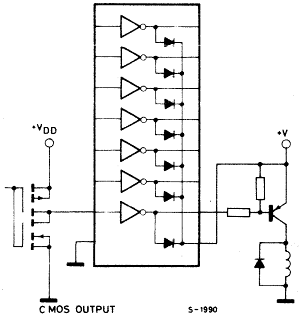

TTL to load (L 203)

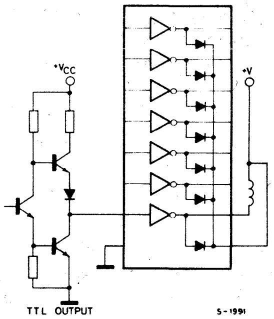

Fig. 9 - DC current gain. vs. collector current (for L 201)

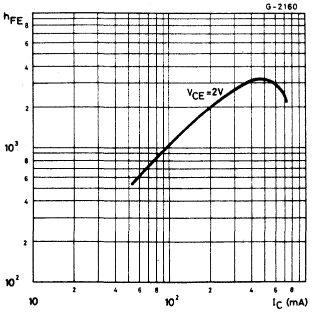

Fig. 10 - Collector current vs. collector emitter saturation voltage

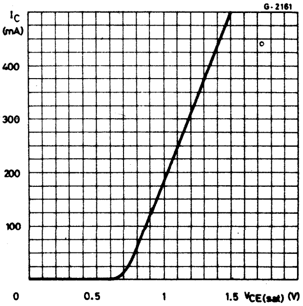

Fig. 11 - Peak collector current as a function fo duty cycle and number of outputs

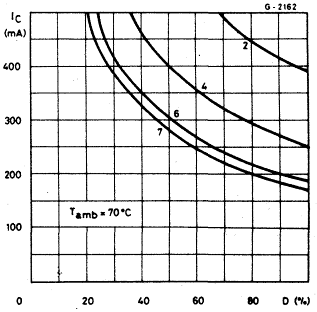

Fig. 12 - Input current vs. input voltage (for L 202 and L 204)

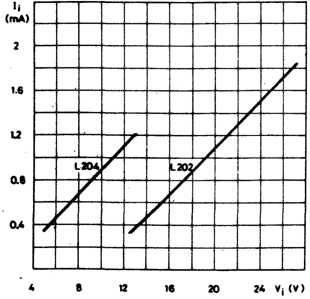

Fig. 13 - Input current vs. input voltage (L 203)

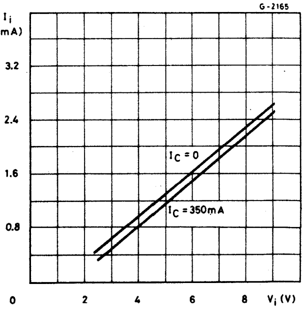

Fig. 14 - Power rating chart

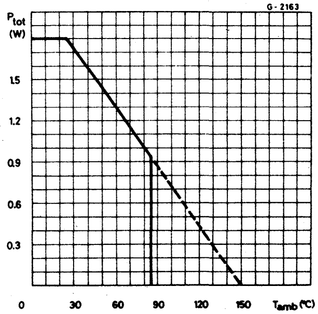

SGS **L272**

LINEAR INTEGRATED CIRCUITS

ADVANCE DATA

DUAL POWER OPERATIONAL AMPLIFIER

- OUTPUT CURRENT TO 1A
- OPERATES AT LOW VOLTAGES
- SINGLE OR SPLIT SUPPLY
- LARGE COMMON-MODE RANGE
- LARGE DIFFERENTIAL MODE RANGE
- STABLE WITH UNITY GAIN
- GROUND COMPATIBLE INPUTS
- LOW SATURATION (1V/0.5A)
- THERMAL SHUTDOWN

The L272 is a monolithic integrated circuit in powerdip package, intended for use as power operational amplifier in a wide range of applications including servo amplifiers and power supplies.
The high gain and high output power capability provide superior performance whetever an operational amplifier/power booster combination is required.

ABSOLUTE MAXIMUM RATINGS

V_s	Supply voltage	28	V
V_i	Input voltage	V_s	
V_i	Differential input voltage	$\pm V_s$	
I_o	DC output current	1	A
I_p	Peak output current (non repetitive)	1.5	A
P_{tot}	Power dissipation at $T_{amb} = 80°C$	1	W
	$T_{case} = 75°C$	5	W
T_{stg}, T_j	Storage and junction temperature	-40 to 150	°C

ORDERING NUMBER: L272B

MECHANICAL DATA

Dimensions in mm

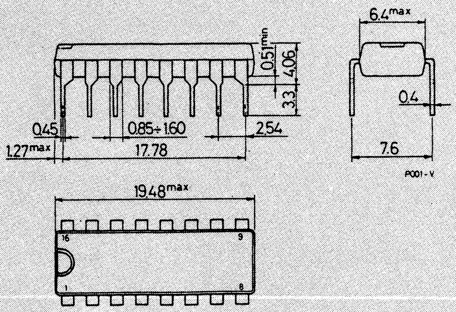

CONNECTION AND BLOCK DIAGRAM

(top view)

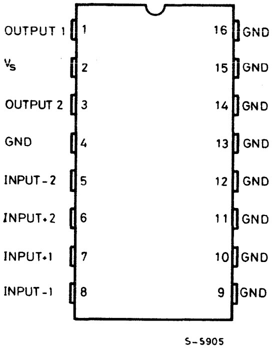

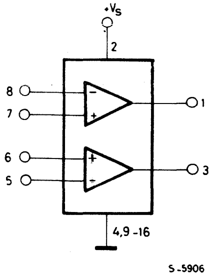

SCHEMATIC DIAGRAM

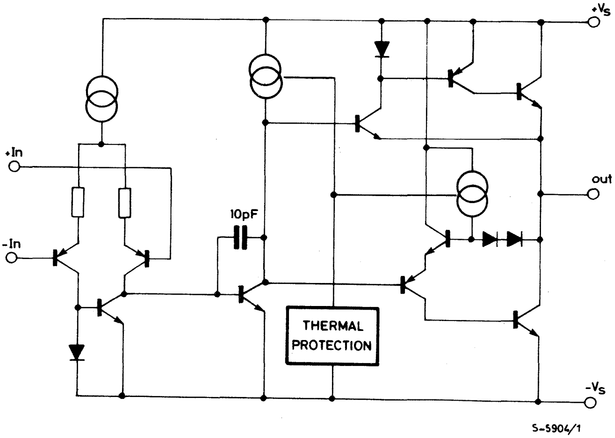

THERMAL DATA

$R_{th\ j-case}$	Thermal resistance junction-pins	max	15	°C/W
$R_{th\ j-amb}$	Thermal resistance junction-amb	max	70	°C/W

ELECTRICAL CHARACTERISTICS (V_s = 24V, T_{amb} = 25°C unless otherwise specified)

Parameter		Test conditions	Min.	Typ.	Max.	Unit
V_s	Supply voltage		4		28	V
I_d	Quiescent drain current			5.5	12	mA
I_b	Input bias current			0.5	2.5	μA
V_{os}	Input offset voltage			15		mV
I_{os}	Input offset current			50	250	nA
SR	Slew-Rate	G_V = 1		1		V/μs
B	Gain-bandwidth product			350		KHz
V_o	Output voltage swing	f = 1 kHz I_p = 0.1A I_p = 0.5A		23 22.5		Vpp
R_i	Input resistance		500			KΩ
G_V	Voltage gain (open loop)			70		dB
e_N	Input noise voltage	B = 10 to 10 000 Hz		5		μV
i_N	Input noise current			200		pA
CMR	Common mode rejection			70		dB
SVR	Supply voltage rejection	f_{ripple} = 100 Hz Single Supply		70		dB
		Split Supply		62		dB
T_{sd}	Thermal shutdown junction temperature			160		°C

Fig. 1 - Motor current control circuit

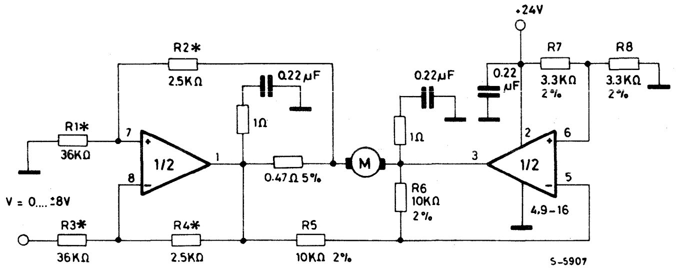

$* < 1\%$

$$I_M = 0.14 \cdot V_i$$

Note: The input voltage level is compatible with L291 (5-bit D/A converter).

Fig. 2 - Bidirectional DC motor control with μP compatible inputs

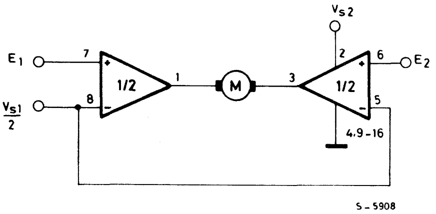

V_{S1} = logic supply voltage Must be $V_{S2} > V_{S1}$ E1, E2 = logic inputs

Fig. 3 - Bidirectional speed control of DC motors

For circuit stability ensure that $R_x > \frac{2\ R3 \cdot R1}{R_M}$ where R_M = internal resistance of motor. The voltage available at the terminals of the motor is $V_M = 2\ (V_i - \frac{V_s}{2}) + |R_o| \cdot I_M$ where $|R_o| = \frac{2\ R3 \cdot R1}{R_x}$ and I_M is the motor current;

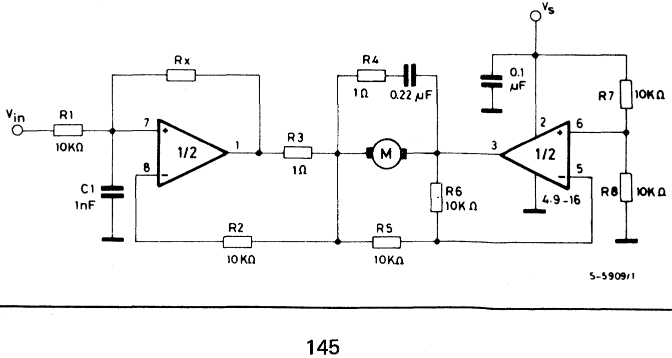

Fig. 4 - Position control for car headlights.

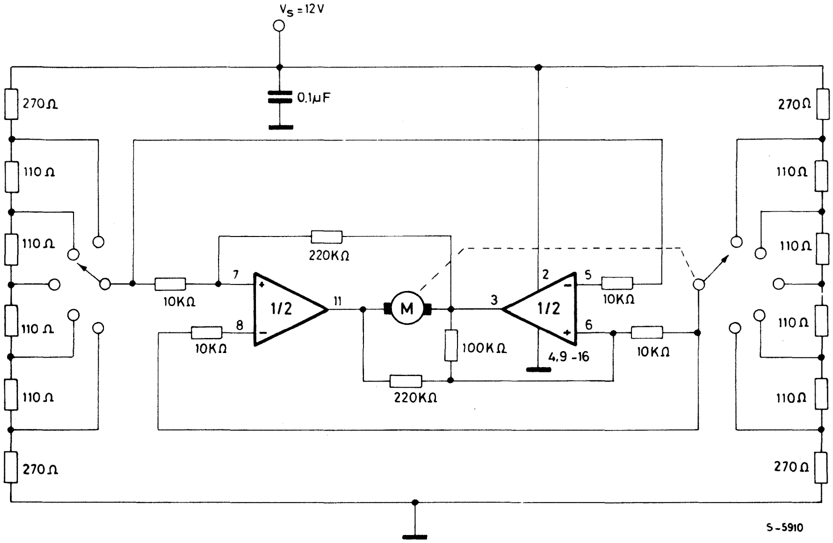

LINEAR INTEGRATED CIRCUITS

SGS **L272M**

ADVANCE DATA

DUAL POWER OPERATIONAL AMPLIFIER

- OUTPUT CURRENT TO 1A
- OPERATES AT LOW VOLTAGES
- SINGLE OR SPLIT SUPPLY
- LARGE COMMON-MODE RANGE
- LARGE DIFFERENTIAL MODE RANGE
- STABLE WITH UNITY GAIN
- GROUND COMPATIBLE INPUTS
- LOW SATURATION (1V/0.5A)
- THERMAL SHUTDOWN

The L272M is a monolithic integrated circuit in 8 lead minidip package, intended for use as power operational amplifier in a wide range of applications including servo amplifiers and power supplies. The high gain and high output power capability provide superior performance whetever an operational amplifier/power booster combination is required.

ABSOLUTE MAXIMUM RATINGS

V_s	Supply voltage	28	V
V_i	Input voltage	V_s	
V_i	Differential Input Voltage	$\pm V_s$	
I_o	DC Output Current	1	A
I_P	Peak Output Current (non repetitive)	1.5	A
P_{tot}	Power Dissipation at $T_{amb} = 50°C$	1	W
T_{stg}, T_j	Storage and junction temperature	-40 to 150	°C

ORDERING NUMBER: L272 MB

MECHANICAL DATA

Dimensions in mm

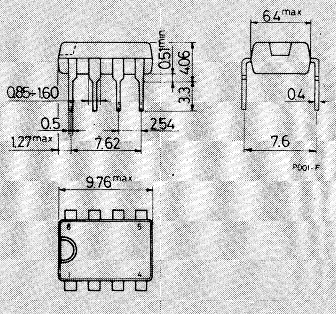

CONNECTION AND BLOCK DIAGRAM
(top view)

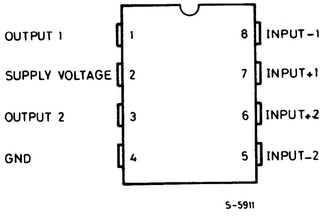

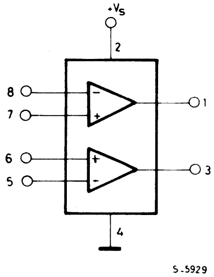

SCHEMATIC DIAGRAM

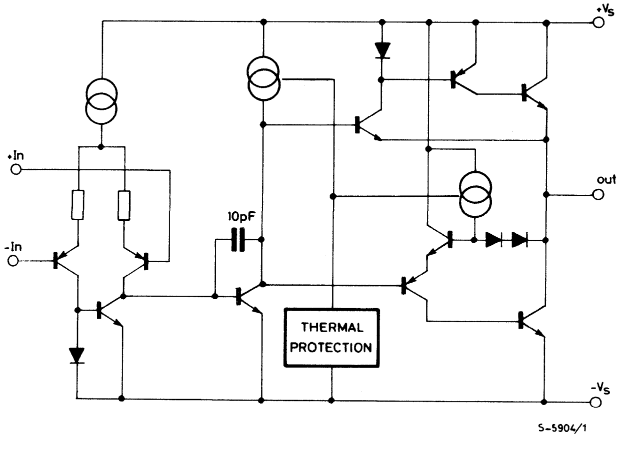

THERMAL DATA

$R_{th\ j\text{-}case}$	Thermal resistance junction-pin 4	max	70	°C/W
$R_{th\ j\text{-}amb}$	Thermal resistance junction-amb	max	100	°C/W

ELECTRICAL CHARACTERISTICS (V_s = 24V, T_{amb} = 25°C unless otherwise specified)

Parameter		Test conditions	Min.	Typ.	Max.	Unit
V_s	Supply voltage		4		28	V
I_d	Quiescent drain current			5.5	12	mA
I_b	Input bias current			0.5	2.5	μA
V_{os}	Input offset voltage			15		mV
I_{os}	Input offset current			50	250	nA
SR	Slew-Rate	G_v = 1		1		V/μs
B	Gain-bandwidth product			350		KHz
V_o	Output voltage swing	f = 1 kHz I_p = 0.1A		23		Vpp
		I_p = 0.5A		22.5		Vpp
R_i	Input resistance		500			KΩ
G_v	Voltage gain (open loop)			70		dB
e_N	Input noise voltage	B = 10 to 10 000 Hz		5		μV
i_N	Input noise current			200		pA
CMR	Common mode rejection			70		dB
SVR	Supply voltage rejection	f_{ripple} = 100 Hz Single Supply		70		dB
		Split Supply		62		dB
T_{sd}	Thermal shutdown junction temperature			160		°C

Fig. 1 - Motor current control circuit

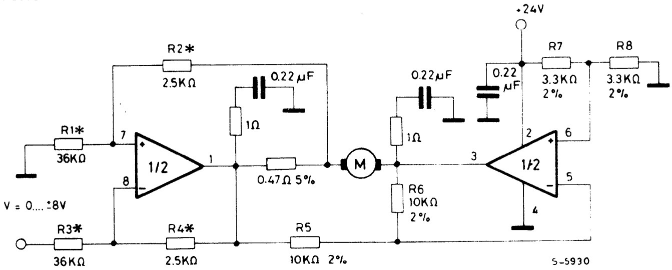

$* < 1\%$

$I_M = 0.14 \cdot V_i$

Note: The input voltage level is compatible with L291 (5 - BIT D/A converter).

Fig. 2 - Bidirectional DC motor control with µP compatible inputs

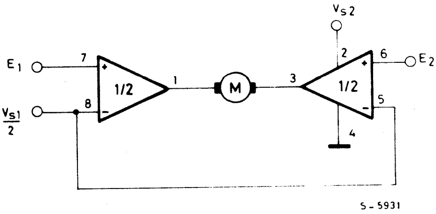

V_{S1} = logic supply voltage

Must be $V_{S2} > V_{S1}$

E1, E2 = logic inputs

Fig. 3 - Bidirectional speed control of DC motors

For circuit stability ensure that $R_x > \frac{2\ R3 \cdot R1}{R_M}$ where R_M = internal resistance of motor. The voltage available at the terminals of the motor is $V_M = 2\ (V_i - \frac{V_s}{2}) + |R_o| \cdot I_M$ where $|R_o| = \frac{2\ R3 \cdot R1}{R_x}$ and I_M is the motor current.

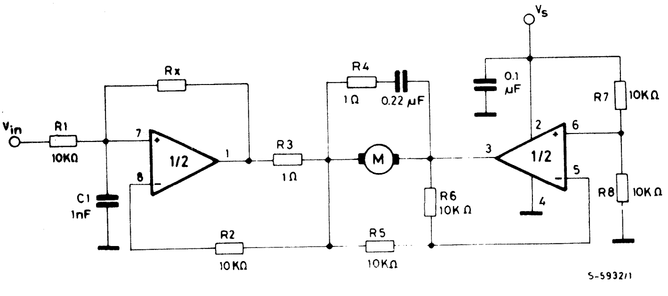

LINEAR INTEGRATED CIRCUITS

SGS **L290**

TACHOMETER CONVERTER

The L290, a monolithic LSI circuit in a 16-lead dual in-line plastic package, is intended for use with the L291 and L292 which together form a complete 3-chip DC motor positioning system for applications such as carriage/daisy-wheel position control in typewriters.
The L290/1/2 system can be directly controlled by a microprocessor. The L290 integrates the following functions:

- tacho voltage generator (F/V converter)
- reference voltage generator
- position pulse generator.

ABSOLUTE MAXIMUM RATINGS

V_s	Supply voltage	± 15	V
V_i (FTA, FTB, FTF)	Input signals	± 7	V
P_{tot}	Total power dissipation $T_{amb} = 70°C$	1	W
T_{stg}, T_j	Storage and junction temperature	-40 to +150	°C

ORDERING NUMBER: L290 B

MECHANICAL DATA

Dimensions in mm

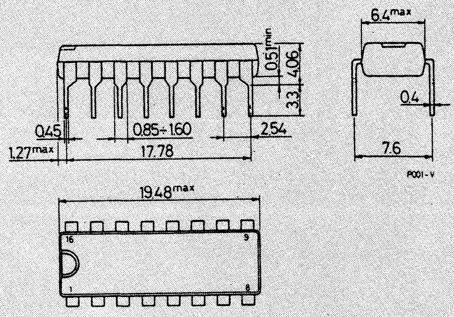

CONNECTION DIAGRAM
(top view)

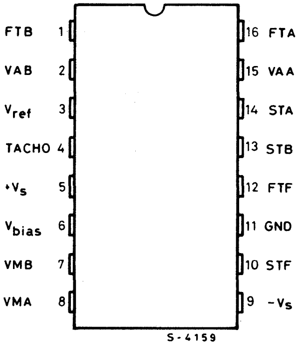

BLOCK DIAGRAM

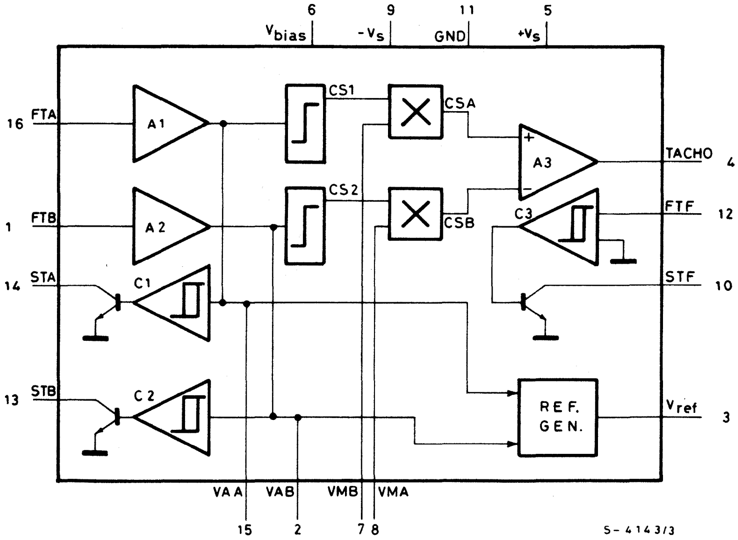

TEST CIRCUIT

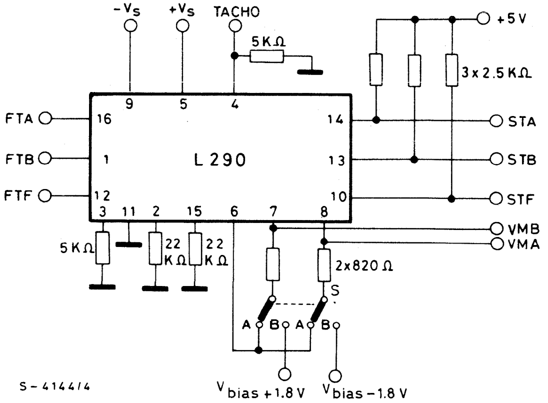

THERMAL DATA

$R_{th\ j\text{-}amb}$	Thermal resistance junction-ambient	max	80	°C/W

ELECTRICAL CHARACTERISTICS (Refer to the test circuit, S in (A), $V_s = \pm 12V$, $T_{amb} = 25°C$ unless otherwise specified)

Parameters		Test conditions	Min.	Typ.	Max.	Unit
V_s	Supply voltage		±10		±15	V
I_d	Quiescent drain current	$V_s = \pm 15V$		13	20	mA

INPUT AMPLIFIERS (A_1 and A_2)

FTA, FTB	Input signal from encoder (pin 1, 16)	f_{max}= 20 KHz	±0.4		±0.6	V_p
V_{os}	Output offset voltage (pin 2, 15)	FTA = FTB = 0V			± 55	mV
I_b	Input bias current (pin 1, 16)			0.15		μA
G_v	Voltage gain	f = 10 KHz FTA=FTB=±0.6V_p	22	23	24	dB
V_o	Output voltage swing (pin 2, 15)	FTA= FTB= ± 1 V_p	±9.5			V

ELECTRICAL CHARACTERISTICS (continued)

Parameters	Test conditions	Min.	Typ.	Max.	Unit

COMPARATORS WITH HYSTERESIS (C_1, C_2 and C_3)

V_{THP}(°)	Positive Threshold voltage (pin 2, 12, 15)	C_1 and C_2	550		850	mV
		C_3	700		900	mV
V_{THN}(°°)	Negative Threshold voltage (pin 2, 12, 15)	C_1 and C_2	55		175	mV
		C_3	570		830	mV
ΔFTF	Threshold Hysteresis	C_3	72		120	mV
V_L	Output voltage (low level) (pin 10, 13, 14)	I_o = 2 mA FTA= FTB= FTF= 0V		0.2	0.4	V
I_{leak}	(pins 10, 13, 14)	FTA= FTB= 0.5V V_{CE}= 5V FTF= 1V			1	μA

REFERENCE GENERATOR

V_{ref}	DC reference voltage (pin 3)	FTA= FTB= ± 0.5V_p(*) I_{ref}= 1 mA	4.5	5	5.5	V
I_{ref}	Output current (pin 3)				1.4	mA

"TACHO" AMPLIFIER (A_3)

V_{os}	Output offset voltage (pin 4)	FTA= ± 15 mV FTB= 0.5V				± 80	mV
V_o	DC output voltage (pin 4)	FTA= FTB= ±0.5Vp V_{MA}= V_{MB}= ±1.25V_p	(**) V_{o1}	5.4	6	6.6	V
			(***) V_{o2}	-5.4	-6	-6.6	
ΔV_o		$V_{o1} + V_{o2}$		-150		+150	mV
V_o	Output voltage swing (pin 4)	S in (B)	FTA= FTB= 0.5V	9			V
			FTA= FTB= -0.5V	-9			
V_{MA} V_{MB}	Multiplier input voltage (pin 7, 8)				± 1.25	± 1.7	Vp
V_{bias}	Bias voltage (pin 6)	FTA and FTB floating		-6.5		-8	V

(°) : FTA = FTB = FTF = 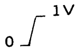

(°°) : FTA = FTB = FTF = 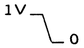

Note : Phase relationship between the signals:
* FTA : 0° FTB : 90°
** FTA : 0° FTB : -90° V_{MA}= 90° V_{MB}= 0°
*** FTA : 0° FTB : 90° V_{MA}= 90° V_{MB}= 180°

WAVEFORMS (Neglecting threshold voltage level of the comparators)

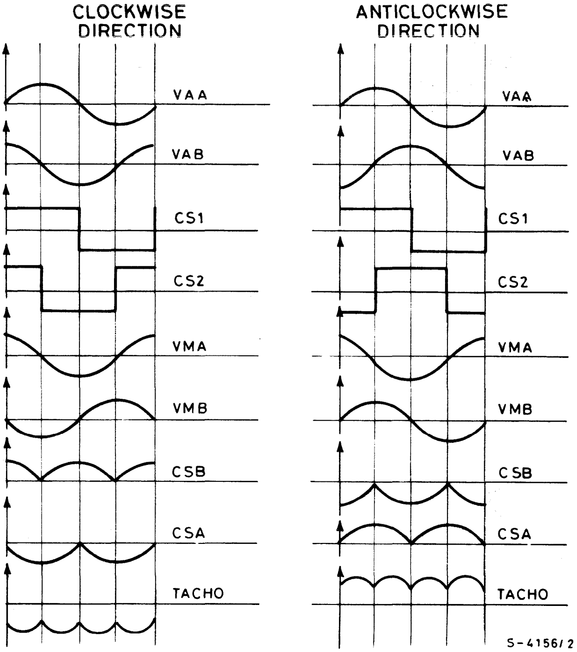

SYSTEM DESCRIPTION : refer to the L292 data sheet

Fig. 1 - Complete application circuit

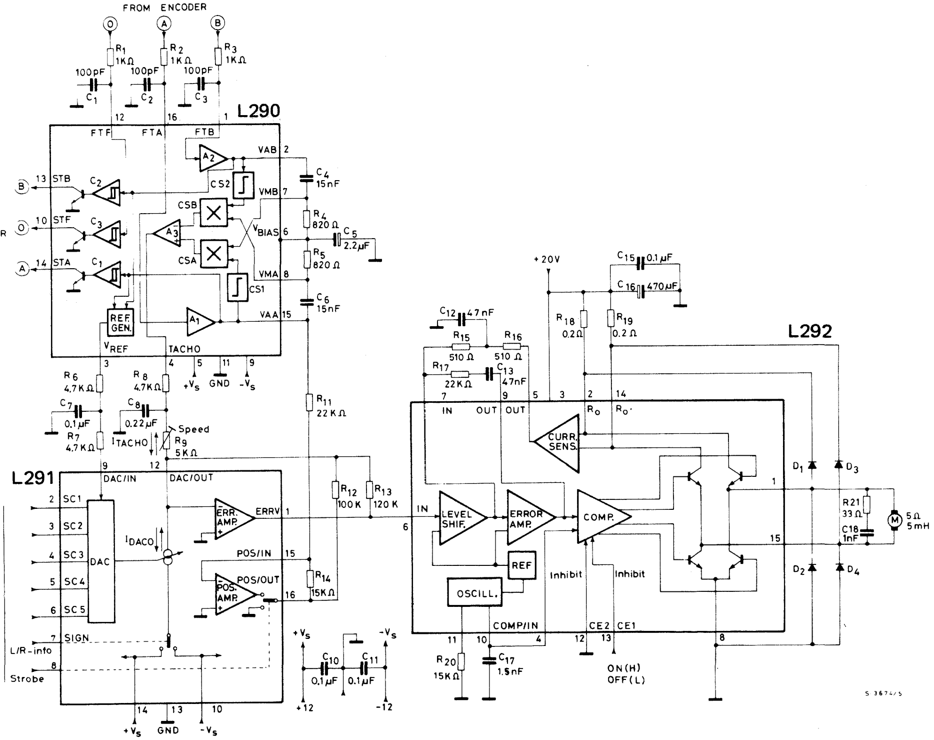

D1 to D4 : $\left\{ \begin{array}{l} V_F \leq 1.2V \ @ \ I = 2A \\ trr \leq 200 \text{ ns} \end{array} \right.$

LINEAR INTEGRATED CIRCUITS

SGS **L291**

5 BIT - D/A CONVERTER AND POSITION AMPLIFIER

The L291, a monolithic LSI circuit in a 16-lead dual in-line plastic package, is intended for use with the L290 and L292 to form a complete 3 chip DC motor positioning system for applications such as carriage/daisy-wheel position control in typewriters.

The L290/1/2 system can be directly controlled by a microprocessor.

The L291 integrates the following functions:

- 5 bit D/A converter ($\frac{1}{2}$ LSB max linearity error)
- error amplifier
- position amplifier

ABSOLUTE MAXIMUM RATINGS

V_s	Supply voltage	± 15	V
P_{tot}	Total power dissipation $T_{amb} = 70°C$	1	W
T_{stg}, T_j	Storage and junction temperature	-40 to 150	°C

ORDERING NUMBER: L291 B

MECHANICAL DATA

Dimensions in mm

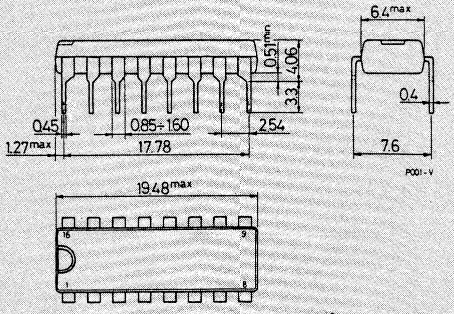

CONNECTION DIAGRAM
(top view)

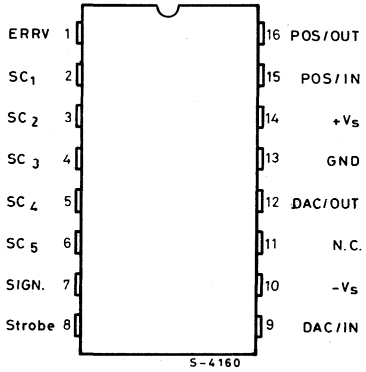

BLOCK DIAGRAM

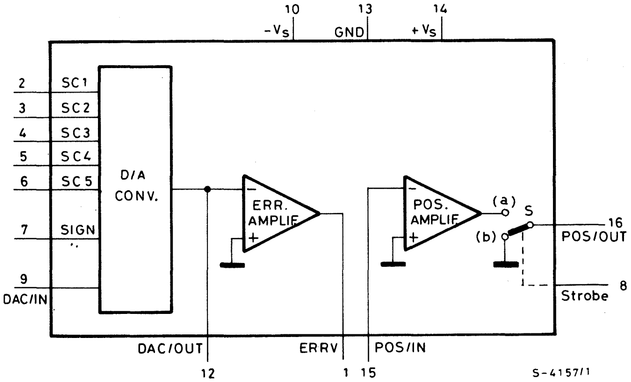

TEST CIRCUIT

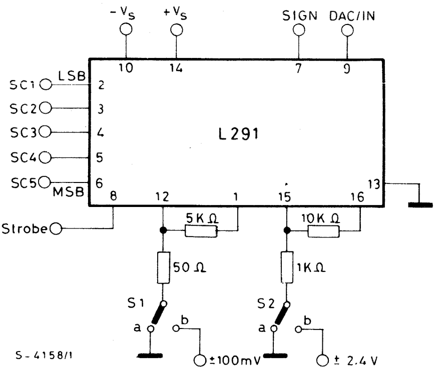

THERMAL DATA

$R_{th\ j\text{-}amb}$	Thermal resistance junction-ambient	max	80	°C/W

ELECTRICAL CHARACTERISTICS (Refer to the circuit, S1 and S2 in (a), $V_s = \pm 12V$, $T_{amb} = 25°C$, unless otherwise specified)

Parameters		Test conditions	Min.	Typ.	Max.	Unit
V_s	Supply voltage		± 10		± 15	V
I_d	Quiescent drain current			6.5	10	mA

POSITION AMPLIFIER

V_{strobe}	Enable voltage level	V_L (S in (a)) *	0		0.8	V
		V_H (S in (b)) *	2.4		$+V_s$	V
V_{os}	Output offset voltage (pin 16)	$V_{strobe} = V_L$; $G_v = 20$ dB			± 50	mV
I_b	Input bias current (pin 15)	$V_{strobe} = V_L$			0.3	μA
V_o	Output voltage swing (pin 16)	$V_{strobe} = V_L$; S2 in(b); $V_s = \pm 10.8V$	± 9			V
V_R	Residual output voltage (pin 16)	$V_{strobe} = V_H$			± 20	mV

* See block diagram and the note for Position Amplifier

ELECTRICAL CHARACTERISTICS (continued)

Parameter	Test conditions	Min.	Typ.	Max.	Unit
D/A CONVERTER					
I_{ref} Current reference input range (pin 9)		0.3		1.2	mA
V_{os} Current reference offset voltage (pin 9)	I_{ref}= 0.3 to 1.2 mA All inputs high			± 20	mV
I_o Output current range (pin 12)				1.4	mA
I_o Output current (pin 12)	I_{ref}= 0.722 mA SC1 to SC5 = L SIGN = L (I_{o1})	-1.358	-1.4	-1.442	mA
	SIGN = H (I_{o2})	+1.358	+1.4	+1.442	
ΔI_o	$I_{o1} + I_{o2}$	-21		+21	µA
Linearity error	I_{ref}= 0.722 mA			1.61	%FS
I_{os} Pin 12 output offset current (including Error Amplifier bias current)	All inputs high			± 0.4	µA
V_L Low voltage level (digital inputs)	SC1 = LSB SC5 = MSB	0		0.8	V
V_H High voltage level (digital inputs)		2.4		$+V_S$.	V
I_L Digital inputs current (low state)	V_L= 0.4V			-50	µA
I_H Digital inputs current (high state)	V_H= $+V_s$			1	µA
ERROR AMPLIFIER					
V_{os} Output offset voltage (pin 1)	I_{ref}= 0.5 mA; All inputs high G_v= 40 dB			± 200	mV
I_o Output current (pin 1)				± 5	mA
V_o Output voltage swing (pin 1)	All inputs high S1 in (b); R_L= 10 KΩ	± 7.4		± 8.4	Vp

D/A Converter

The L291 contains a 5-bit D/A converter accepting a binary code and generating a bipolar output current, the polarity of which depends on the SIGN input. The amplitude of the output current is a multiple of a reference current I_{ref}.
The maximum output current is

$$I_{FS} = \pm \frac{31}{16} I_{ref}$$

The following table shows the value of I_o for different input codes. Note that the input bits are active low.

DIGITAL INPUT WORD						Output Current I_o
SIGN	SC5 MSB	SC4	SC3	SC2	SC1 LSB	
L	L	L	L	L	L	$-\frac{31}{16} I_{ref}$
L	H	H	H	H	L	$-\frac{1}{16} I_{ref}$
X	H	H	H	H	H	O
H	H	H	H	H	L	$+\frac{1}{16} I_{ref}$
H	L	L	L	L	L	$+\frac{31}{16} I_{ref}$

X = indifferent
L = low
H = high

This D/A converter has a maximum linearity error equal to ± 1/2 LSB (or ± 1.61% Full Scale); that guarantees its monotonicity.

Error Amplifier

In order to have a good stability, the Error Amplifier must work with a closed loop gain greater or equal than 20 dB.

Position Amplifier

It is inserted by means of the strobe signal, TTL and microprocessor compatible. Its output is connected to pin 16 when V_{strobe}= Low; pin 16 is grounded for V_{strobe}= High.

SYSTEM DESCRIPTION: refer to the L292 data sheet.

Fig. 1 - Complete application circuit

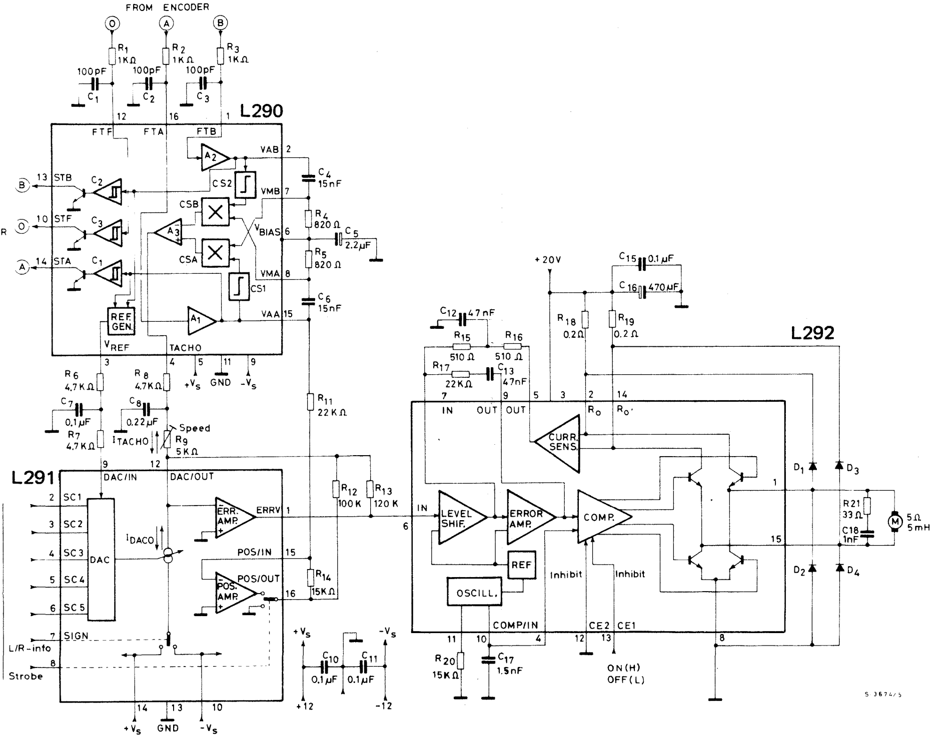

D1 to D4 : { $V_F \leq 1.2V$ @ I = 2A
trr ≤ 200 ns

L292

SWITCHMODE DRIVER FOR DC MOTORS

The L292 is a monolithic LSI circuit in 15-lead Multiwatt® package. It is intended for use, together with L290 and L291, as a complete 3-chip DC motor positioning system for applications such as carriage/daisy-wheel position control in typewriters.

The L290/1/2 system can be directly controlled by a microprocessor. The outstanding characteristics of the L292 are:

- Driving capability: 2A, 36V, 30 KHz.
- 2 Logic chip enable.
- External loop gain adjustment.
- Single power supply (18 to 36V).
- Input signal symmetric to ground.
- Thermal protection.

ABSOLUTE MAXIMUM RATINGS

V_s	Power supply	36	V
V_I	Input voltage	-15 to $+V_s$	V
$V_{inhibit}$	Inhibit voltage	0 to V_s	V
I_o	Output current	2.5	A
P_{tot}	Total power dissipation (T_{case} = 75°C)	25	W
T_{stg}	Storage and junction temperature	-40 to +150	°C

ORDERING NUMBER: L292

MECHANICAL DATA

Dimensions in mm

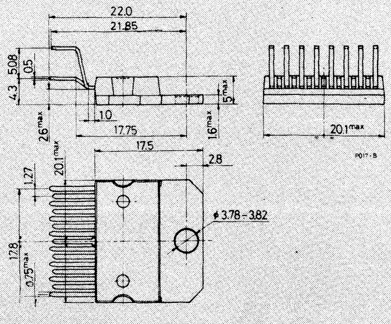

CONNECTION DIAGRAM

(top view)

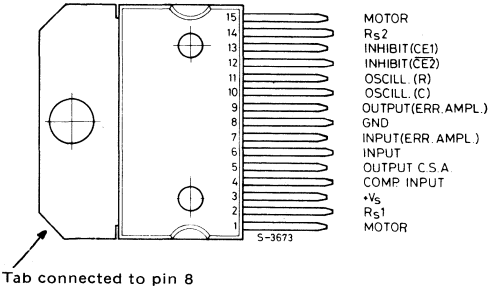

Tab connected to pin 8

BLOCK DIAGRAM AND TEST CIRCUIT

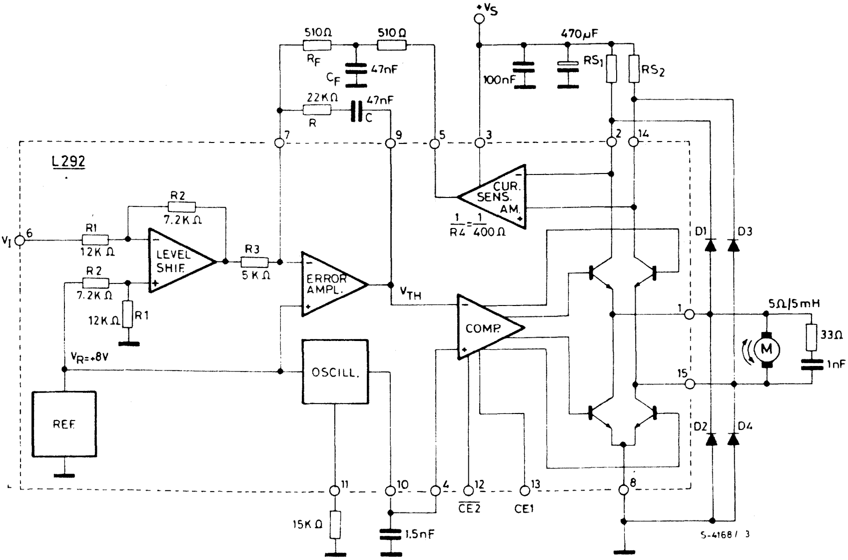

D1 · D2 · D3 · D4 = High speed diodes $\left\{ \begin{array}{l} V_F \leq 1.2V @ I = 2A \\ trr \leq 200\ ns \end{array} \right.$

THERMAL DATA

$R_{th\ j\text{-case}}$	Thermal resistance junction-case	max	3	°C/W

ELECTRICAL CHARACTERISTICS (T_{amb}= 25°C, f_{osc}= 20 KHz unless otherwise specified)

Parameter		Test conditions		Min.	Typ.	Max.	Unit
V_s	Supply voltage			18		36	V
I_d	Quiescent drain current	V_s = 20V (offset null)			30	50	mA
V_{os}	Input offset voltage (pin 6)	V_s = 36V	I_o = 0			±350	mV
$V_{inh.}$	Inhibit low level (pin 12, 13)					2	V
	Inhibit high level (pin 12, 13)			3.2			V
$I_{inh.}$	Low voltage condition	$V_{inh.}$ (L)= 0.4V				-100	μA
	High voltage conditions	$V_{inh.}$ (H)= 3.2V				10	μA
I_i	Input current (pin (6)	V_I = -8.8V V_I = +8.8V				-1.8 0.5	mA mA
V_i	Input voltage (pin 6)	R_{s1}= R_{s2}=0.2Ω	I_o= 2A		9.1		V
			I_o= -2A		-9.1		V
I_o	Output current	V_I = ± 9.8V R_{s1}= R_{s2}= 0.2Ω		± 2			A
V_D.	Total drop out voltage	(inluding sensing resistors)	I_o= 2A			5	V
			I_o= 1A			3,5	V
V_{RS}	Sensing resistor voltage drop	T_j = 150°C	I_o= 2A			0.44	V
$\frac{I_o}{V_i}$	Transconductance	R_{s1}= R_{s2}= 0.2Ω		205	220	235	mA/V
		R_{s1}= R_{s2}= 0.4Ω			120		mA/V
f_{osc}	Frequency range (pin 10)			1		30	KHz

TRUTH TABLE

$V_{inhibit}$		Output stage condition
Pin 12	Pin 13	
L	L	Disabled
L	H	Normal operation
H	L	Disabled
H	H	Disabled

SYSTEM DESCRIPTION

The L290, L291 and L292 are intended to be used as a 3-chip microprocessor controlled positioning system. These devices may be used separately - particularly the L292 motor driver - but since they will usually be used together, a description of a typical L290/1/2 system follows.

Fig. 1 - System block diagram

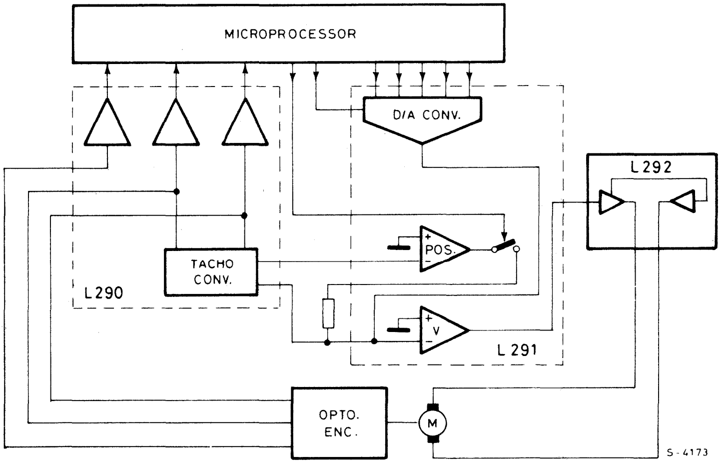

The system operates in two modes to achieve high-speed, high-accuracy positioning.
Speed commands for the system originate in the microprocessor. It is continuously updated on the motor position by means of pulses from the L290 tachometer chip, which in turn gets its information from the optical encoder. From this basic input, the microprocessor computes a 5-bit control word that sets the system speed dependent on the distance to travel.
When the motor is stopped and the microprocessor orders it to a new position, the system operates initially in an open-loop configuration as there is no feedback from the tachometer generator. Therefore maximum current is fed to the motor. As maximum speed is reached, the tachometer chip output backs off the processor signal thus reducing accelerating torque.
The motor continues to run at top speed but under closed-loop control.
As the target position is approached, the microprocessor lowers the value of the speed-demand word; this reduces the voltage at the main summing point, in effect braking the motor. The braking is applied progressively until the motor is running at minimum speed.
At that time, the microprocessor orders a switch to the position mode, (strobe signal at pin 8 of L291) and within 3 to 4 ms the L292 drives the motor to a null position, where it is held by electronic "detenting".

SYSTEM DESCRIPTION (continued)

The mechanical/electrical interface consists of an optical encoder which generates two sinusoidal signals 90° out of phase (leading or lagging according to the motor direction) and proportional in frequency to the speed of rotation. The optical encoder also provides an output at one position on the disk which is used to set the initial position.

The opto encoder signals, FTA and FTB are filtered by the networks R_2 C_2 and R_3 C_3 (referring to Fig. 4) and are supplied to the FTA/FTB inputs on the L290.

The main function of the L290 is to implement the following expression:

$$\text{Output signal (TACHO)} = \frac{dV_{AB}}{dt} \cdot \frac{FTA}{|FTA|} - \frac{dV_{AA}}{dt} \cdot \frac{FTB}{|FTB|}$$

Thus the mean value of TACHO is proportional to the rotation speed and its polarity indicates the direction of rotation.

The above function is performed by amplifying the input signals in A_1 and A_2 to obtain V_{AA} and V_{AB} (typ. 7 V_p). From V_{AA} and V_{AB} the external differentiator RC networks R_5 C_6 and $R_4 C_4$ give the signals V_{MA} and V_{MB} which are fed to the multipliers.

The second input to each multiplier consists of the sign of the first input of the other multiplier before differentiation, these are obtained using the comparators C_{S1} and C_{S2}. The multiplier outputs, C_{SA} and C_{SB}, are summed by A_3 to give the final output signal TACHO. The peak-to-peak ripple signal of the TACHO can be found from the following expression:

$$V_{\text{ripple p-p}} = \frac{\pi}{4}(\sqrt{2} - 1) \cdot V_{\text{thaco DC}}$$

The max value of TACHO is:

$$V_{\text{tacho}} \max = \frac{\pi}{4} \sqrt{2} \cdot V_{\text{thaco DC}}$$

Using the comparators C_1 and C_2 another two signals from V_{AA} and V_{AB} are derived - the logic signals STA and STB.

These signals are used by the microprocessor to determine the position by counting the pulses.

The L290 internal reference voltage is also derived from V_{AA} and V_{AB}:

$$V_{\text{ref}} \equiv |V_{AA}| + |V_{AB}|$$

This reference is used by the D/A converter in the L291 to compensate for variations in input levels, temperature changes and ageing.

The "one pulse per rotation" opto encoder output is connected to pin 12 of the L290 (FTF) where it is squared to give the STF logic output for the microprocessor.

The TACHO signal and V_{ref} are sent to the L291 via filter networks R_8 C_8 R_9 and R_6 C_7 R_7 respectively. Pin 12 of this chip is the main summing point of the system where TACHO and the D/A converter output are compared.

The input to the D/A converter consists of 5 bit word plus a sign bit supplied by the microprocessor. The sign bit represents the direction of motor rotation. The (analogue) output of the D/A converter - DAC/OUT - is compared with the TACHO signal and the resulting error signal is amplified by the error amplifier, and subsequently appears on pin 1.

SYSTEM DESCRIPTION (continued)

The ERRV signal (from pin 1, L291) is fed to pin 6 of the final chip, the L292 H-bridge motor-driver. This input signal is bidirectional so it must be converted to a positive signal because the L292 uses a single supply voltage. This is accomplished by the first stage - the level shifter, which uses an internally generated 8V reference.

This same reference voltage supplies the triangle wave oscillator whose frequency is fixed by the external RC network (R_{20}, C_{17} - pins 11 and 10) where:

$$f_{osc} = \frac{1}{2RC} \qquad \text{(with } R \geqslant 8.2\ K\Omega\text{)}$$

The oscillator determines the switching frequency of the output stage and should be in the range 1 to 30 KHz.

Motor current is regulated by an internal loop in the L292 which is performed by the resistors R_{18}, R_{19} and the differential current sense amplifier, the output of which is filtered by an external RC network and fed back to the error amplifier.

The choice of the external components in these RC network (pins 5, 7, 9) is determined by the motor type and the bandwidth requirements. The values shown in the diagram are for a 5Ω, 5 mH motor. (See L292 Transfer Function Calculation in Application Information).

The error signal obtained by the addition of the input and the current feedback signals (pin 7) is used to pulse width modulate the oscillator signal by means of the comparator. The pulse width modulated signal controls the duty cycle of the H-bridge to give an output current corresponding to the L292 input signal.

The interval between one side of the bridge switching off and the other switching on, τ , is programmed by C_{17} in conjunction with an internal resistor R_τ.

This can be found from:

$$\tau = R_\tau \cdot C_{pin\ 10}. \quad (C_{17} \text{ in the diagram})$$

Since R_τ is approximately 1.5 KΩ and the recommended τ to avoid simultaneous conduction is 2.5 μs $C_{pin\ 10}$ should be around 1.5 nF.

The current sense resistors R_{18} and R_{19} should be high precision types (maximum tolerance ± 2%) and the recommended value is given by:

$$R_{max} \cdot I_{o\ max} \leqslant 0.44V$$

It is possible to synchronize two L292's, if desired, using the network shown in fig. 2.

Fig. 2

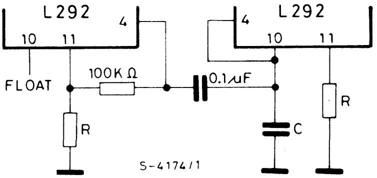

Finally, two enable inputs are provided on the L292 (pins 12 and 13-active low and high respectively).

SYSTEM DESCRIPTION (continued)

Thus the output stage may be inhibited by taking pin 12 high or by taking pin 13 low. The output will also be inhibited if the supply voltage falls below 18V.

The enable inputs were implemented in this way because they are intended to be driven directly by a microprocessor. Currently available microprocessors may generates spikes as high as 1.5V during power-up. These inputs may be used for a variety of applications such as motor inhibit during reset of the logical system and power-on reset (see fig. 3).

Fig. 3

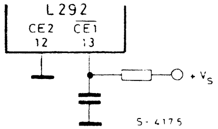

Fig. 4 - Application circuit

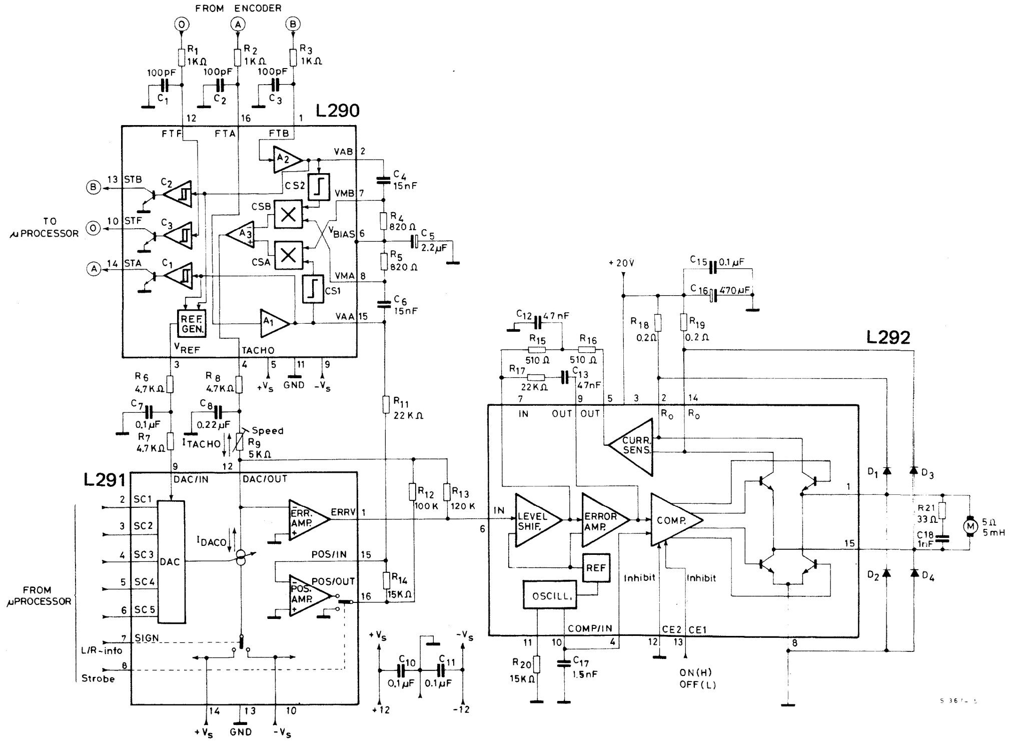

D1 to D4 : $V_F \leqslant 1.2V$ @ I = 2A
trr ≤ 200 ns

APPLICATION INFORMATION

This section has been added in order to help the designer for the best choise of the values of external components.

Fig. 5 - L292 block diagram

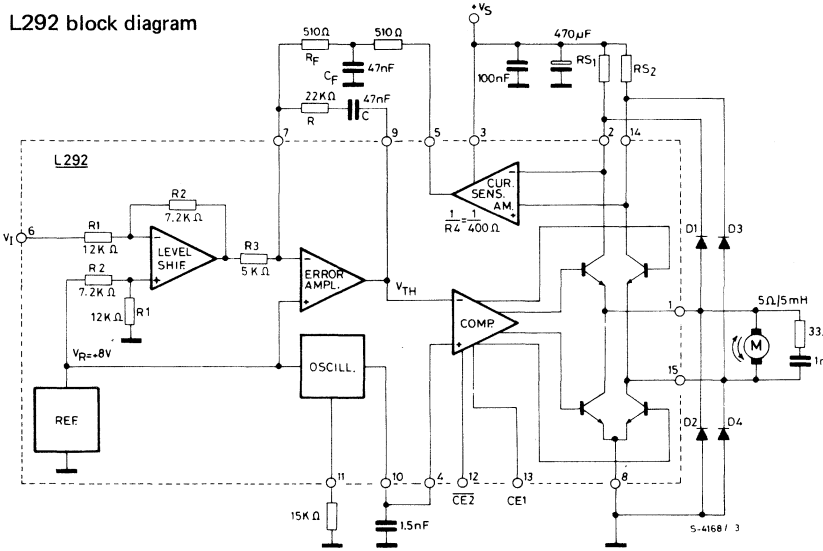

The schematic diagram used for the Laplace analysis of the system is shown in fig. 6.

Fig. 6

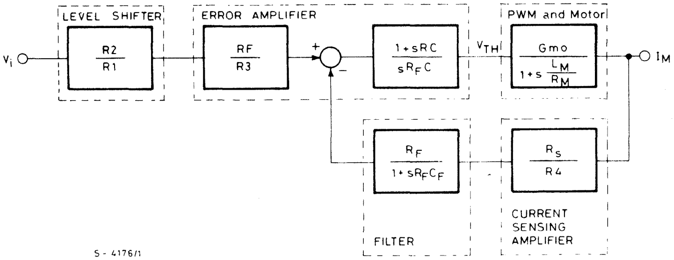

$R_{S1} = R_{S2} = R_S$ (sensing resistors)

$\frac{1}{R_4} = 2.5 \cdot 10^{-3}\ \Omega$ (current sensing amplifier transconductance)

$L_M =$ Motor inductance

$R_M =$ Motor resistance

$I_M =$ Motor current

$G_{mo} = \left.\frac{I_M}{V_{TH}}\right|_{s=0}$ (DC transfer function from the input of the comparator (V_{TH}) to the motor current (I_M)).

APPLICATION INFORMATION (continued)

Neglecting the $V_{CE\,sat}$ of the bridge transistors and the V_{BE} of the diodes:

$$G_{mo} = \frac{1}{R_M}\,\frac{2\,V_s}{V_R} \qquad \text{where: } V_s = \text{supply voltage},\; V_R = 8\text{V (reference voltage)} \qquad (1)$$

DC transfer function

In order to be sure that the current loop is stable the following condition is imposed:

$$1 + sRC = 1 + s\,\frac{L_M}{R_M} \qquad \text{(pole cancellation)} \qquad (2)$$

$$\text{from which } RC = \frac{L_M}{R_M} \qquad \text{(Note that in practice R must be greater than 5.6 K}\Omega\text{)}$$

The transfer function is then,

$$\frac{I_M}{V_I}\,(s) = \frac{R_2\,R_4}{R_1\,R_3}\,G_{mo}\,\frac{1 + sR_FC_F}{G_{mo}\,R_s + s\,R_4C + s^2\,R_FC_FR_4C} \qquad (3)$$

In DC condition, this is reduced to

$$\frac{I_M}{V_I}\,(o) = \frac{R_2\,R_4}{R_1\,R_3}\cdot\frac{1}{R_s} = \frac{0.044}{R_s}\;\left[\frac{A}{V}\right] \qquad (4)$$

Open-loop gain and stability criterion

For $RC = L_M/R_M$, the open loop gain is:

$$A\beta = \frac{1}{sR_FC}\cdot G_{mo}\,\frac{R_s}{R_4}\,\frac{R_F}{1 + sR_FC_F} = \frac{G_{mo}\,R_s}{R_4C}\,\frac{1}{s\,(1 + sR_FC_F)} \qquad (5)$$

In order to achieve good stability, the phase margin must be greater than 45° when $|A\beta| = 1$. That means that, at $f_F = \frac{1}{2\,\pi\,R_FC_F}$, must be $|A\beta| < 1$ (see fig. 7), that is

$$|A\beta|_{f = \frac{1}{2\pi\,R_FC_F}} = \frac{G_{mo}\,R_s}{R_4C}\,\frac{R_FC_F}{\sqrt{2}} < 1 \qquad (6)$$

Fig. 7 - Open-loop frequency response

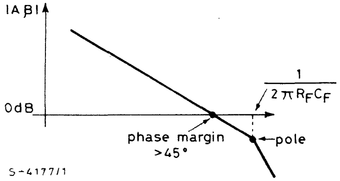

APPLICATION INFORMATION (continued)

Closed-loop system step response

a) **Small-signals analysis.**

The transfer function (3) can be written as follows:

$$\frac{I_M}{V_i}(s) = \frac{0.044}{R_s}\,\frac{1+\dfrac{s}{2\xi\omega_o}}{1+\dfrac{2\xi s}{\omega_o}+\dfrac{s^2}{\omega_o^2}} \qquad (7)$$

where: $\omega_o = \sqrt{\dfrac{G_{mo}\,R_s}{R_4C\,R_FC_F}}$ is the cutoff frequency

$\xi = \sqrt{\dfrac{R_4C}{4\,R_FC_F\,G_{mo}\,R_s}}$ is the dumping factor

By choosing the ξ value, it is possible to determine the system response to an input step signal. Examples:

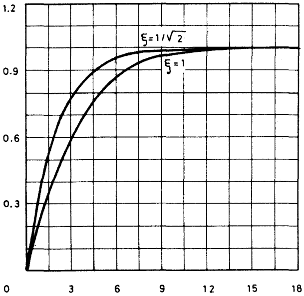
Fig. 8 - Small signal step response (normalized amplitude vs. t/R_FC_F)

1) $\xi = 1$ from which

$$I_M(t) = \frac{0.044}{R_s}\left[1 - e^{-\frac{t}{2R_FC_F}}\left(1+\frac{t}{4\,R_FC_F}\right)\right]\cdot V_i$$

(where V_i is the amplitude of the input step).

2) $\xi = \dfrac{1}{\sqrt{2}}$ from which

$$I_M(t) = \frac{0.044}{R_s}\left(1 - \cos\frac{t}{2R_FC_F}\,e^{-\frac{t}{2R_FC_F}}\right)V_i$$

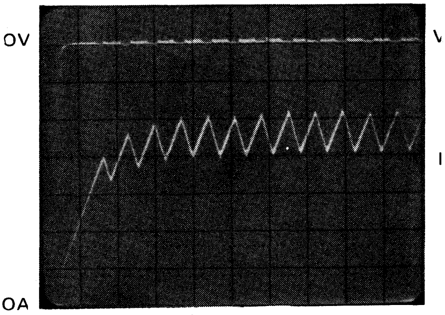

Fig. 9 - Motor current and pin 7 voltage waveforms (application of fig. 5). Small signal response

V_7 = 200mV/div.
I_M = 100mA/div.
t = 100μs/div.
with $V_I = 1.5$ Vp.

From fig. 9, it is possible to verify that the L292 works in "closed-loop" conditions during the entire motor current rise-time: the voltage at pin 7 (inverting input of the error amplifier) is locked to the reference voltage V_R, present at the non-inverting input of the same amplifier.
The previous linear analysis is correct for this example.
Decreasing the ξ value, the rise-time of the current decreases. But for a good stability, from relationship (6), the minimum value of ξ is:

$$\xi_{min} = \frac{1}{2\sqrt[4]{2}} \qquad \text{(phase margin = 45°)}$$

APPLICATION INFORMATION (continued)

b) **Large signal response**

The large step signal response is limited by slew-rate and inductive load.
In this case, during the rise-time of the motor current, the L292 works in open-loop condition, as can be seen from the photograph of fig. 10.

Fig. 10 - Motor current and pin 7 voltage waveforms (application of fig. 5) Large signal response.

V_7 = 1V/div.
I_M = 0.5A/div.
t = 500μs/div.

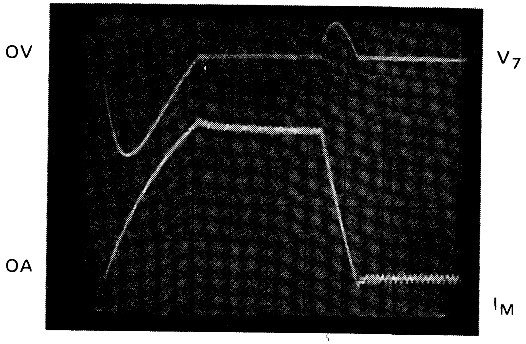

The voltage at pin 7 (inverting input of the error amplifier) departs from the reference voltage V_R present at the non-inverting input and the feedback loop is open.
The fedback loop is on when the motor current reaches its steady-state value (2A).

Closed loop system bandwidth

A good choice for ξ is the value $1/\sqrt{2}$. In this case:

$$\frac{I_M}{V_I}(s) = \frac{0.044}{R_s}\,\frac{1 + s R_F C_F}{1 + 2s R_F C_F + 2s^2 R_F{}^2 C_F{}^2} \qquad (8)$$

The module of the transfer function is:

$$\left|\frac{I_M}{V_I}\right| = \frac{0.044}{R_s}\,\frac{2\sqrt{1+\omega^2 R_F{}^2 C_F{}^2}}{\sqrt{[(1+2\omega R_F C_F)^2+1]\cdot[(1-2\omega R_F C_F)^2+1]}} \qquad (9)$$

The cutoff frequency is derived by the expression (9) by putting $\left|\frac{I_M}{V_I}\right| = 0.707 \cdot \frac{0.044}{R_s}$ (-3 dB), from which:

$$\omega_T = \frac{0.9}{R_F C_F} \qquad f_T = \frac{0.9}{2\pi R_F C_F}$$

APPLICATION INFORMATION (continued)

Example:

a) Data

- Motor characteristics : $L_M = 5$ mH
  $R_M = 5\Omega$
  $L_M/R_M = 1$ msec
- Voltage and current characteristics:
  $V_s = 20V$ $\quad I_M = 2A$ $\quad V_I = 9.1V$
- Closed loop bandwidth: 3 kHz.

b) Calculation

- From relationship (4):

$$R_s = \frac{0.044}{I_M} \; V_I = 0.2\Omega$$

and from (1):

$$G_{mo} = \frac{2\,V_s}{R_M\,V_R} = 1\,\Omega^{-1}$$

- RC = 1 msec [from expression (2)].
- Assuming $\xi = 1/\sqrt{2}$; from (7) follows:

$$\xi^2 = \frac{1}{2} = \frac{400\,C}{4\,R_F C_F \cdot 0.2}$$

- The cutoff frequency is:

$$f_T = \frac{143 \cdot 10^{-3}}{R_F C_F} = 3\text{ kHz}$$

c) Summarising

- $RC = 1 \cdot 10^{-3}$ sec
- $\dfrac{1000\,C}{R_F\,C_F} = 1$
- $R_F C_F \cong 47\,\mu s$

$C = 47$ nF
$R = 22\,K\Omega$
For $R_F = 510\,\Omega \rightarrow C_F = 92$ nF

LINEAR INTEGRATED CIRCUITS

L293
L293E

PRELIMINARY DATA

PUSH-PULL FOUR CHANNEL DRIVERS

- OUTPUT CURRENT 1A PER CHANNEL
- PEAK OUTPUT CURRENT 2A PER CHANNEL (NON REPETITIVE)
- INHIBIT FACILITY
- HIGH NOISE IMMUNITY
- SEPARATE LOGIC SUPPLY
- OVERTEMPERATURE PROTECTION

The L293 and L293E are quad push-pull drivers capable of delivering output currents to 1A per channel. Each channel is controlled by a TTL-compatible logic input and each pair of drivers (a full bridge) is equipped with an inhibit input which turns off all four transistors. A separate supply input is provided for the logic so that it may be run off a lower voltage to reduce dissipation.

Additionally, the L293E has external connections to the lower emitter of each driver, permitting the connection of sensing resistors, for switchmode control.

The L293 and L293E are packaged in 16 and 20-pin plastic DIPs respectively; both use the four center pins to conduct heat to the printed circuit board.

ABSOLUTE MAXIMUM RATINGS

V_s	Supply voltage	36	V
V_{ss}	Logic supply voltage	36	V
V_i	Input voltage	7	V
V_{inh}	Inhibit voltage	7	V
I_{out}	Peak output current (non-repetitive t = 5ms)	2	A
P_{tot}	Total power dissipation at $T_{ground\text{-}pins} = 80°C$	5	W
T_{stg}, T_j	Storage and junction temperature	-40 to 150	°C

ORDERING NUMBERS: L293B (16 leads)
L293E (20 leads)

MECHANICAL DATA

Dimensions in mm

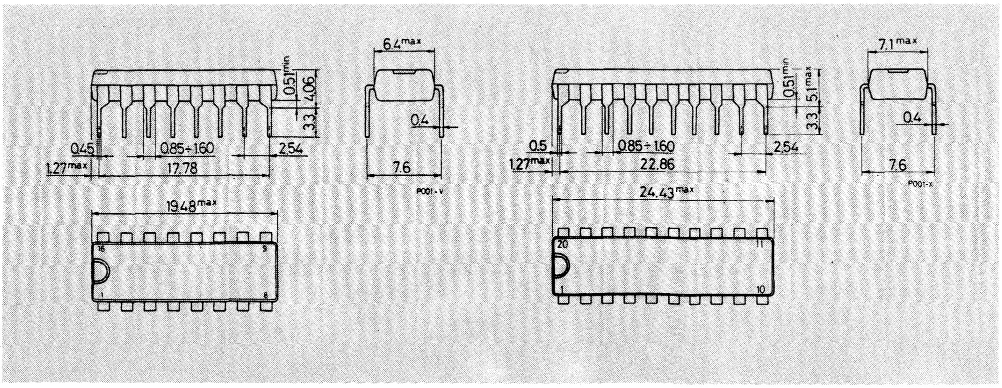

→ Supersedes issue dated 3/83

CONNECTION AND BLOCK DIAGRAM (L293)

(top view)

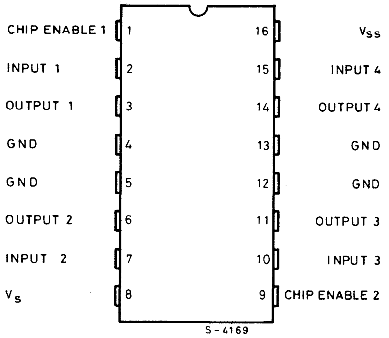

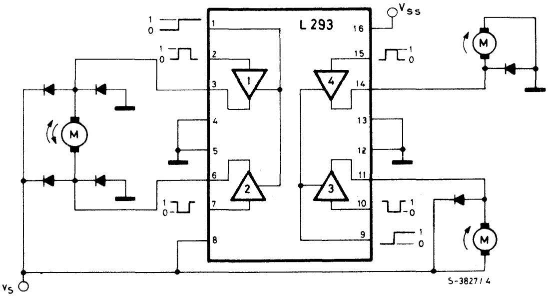

CONNECTION AND BLOCK DIAGRAM (L293E)

(top view)

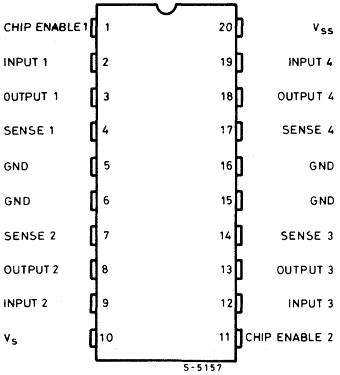

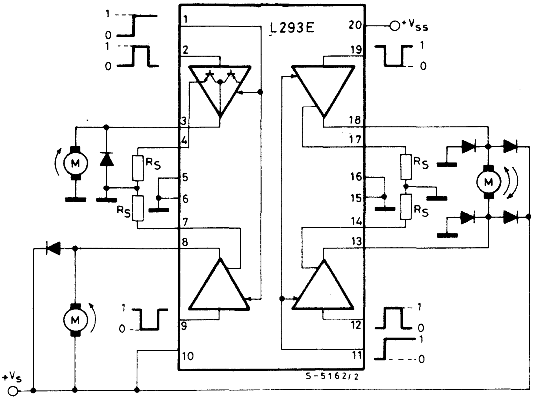

SCHEMATIC DIAGRAM

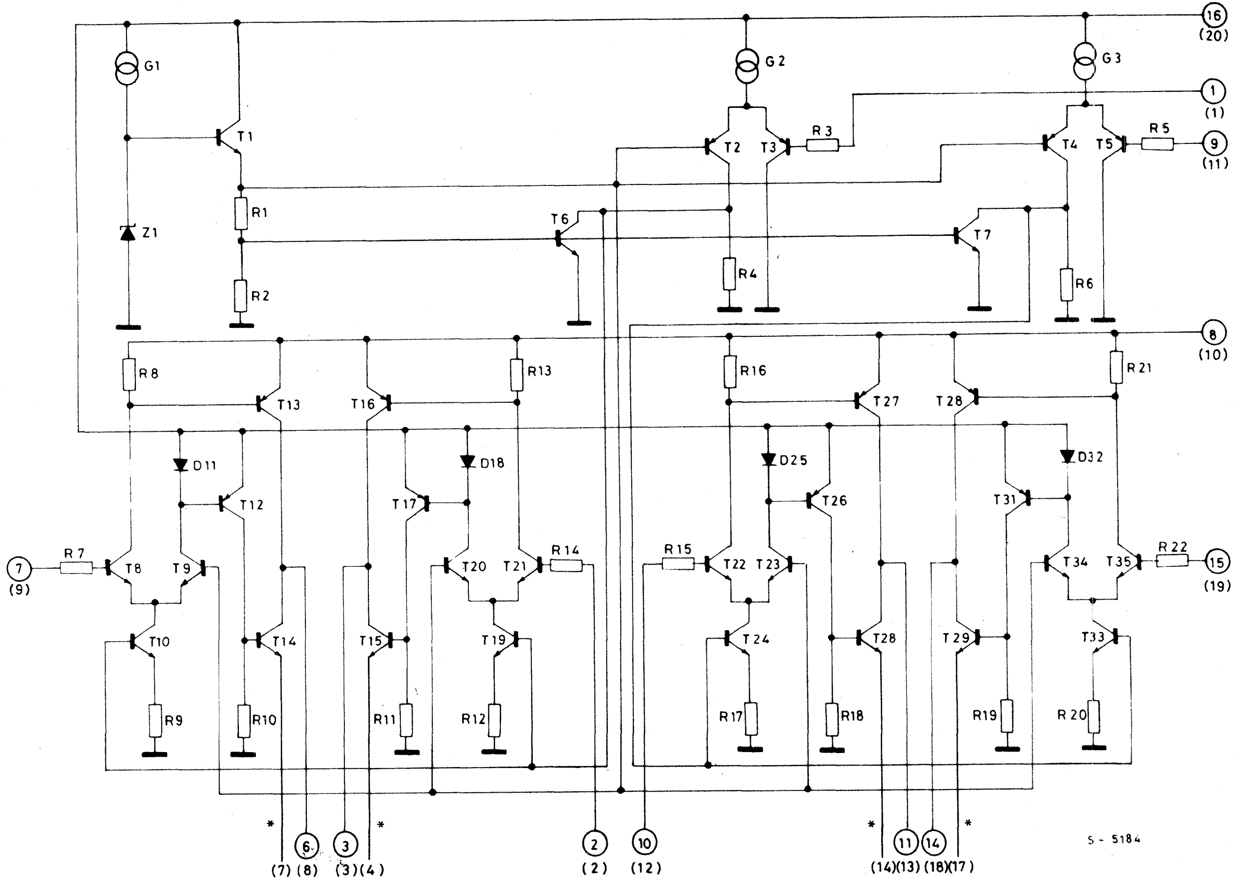

(*) In the L293 these points are not externally available. They are internally connected to the ground (substrate).
○ Pins of L293 ( ) Pins of L293E

THERMAL DATA

$R_{th\ j\text{-}case}$	Thermal resistance junction-case	max	14	°C/W
$R_{th\ j\text{-}amb}$	Thermal resistance junction-ambient	max	80	°C/W

ELECTRICAL CHARACTERISTICS (For each channel, V_S= 24V, V_{SS}= 5V, T_{amb}= 25°C, unless otherwise specified)

Parameter		Test conditions	Min.	Typ.	Max.	Unit
→ V_s	Supply voltage		V_{ss}		36	V
V_{ss}	Logic supply voltage		4.5		36	V
I_s	Total quiescent supply current	V_i = L I_o = 0 V_{inh}= H		2	6	mA
		V_i = H I_o = 0 V_{inh}= H		16	24	
		V_{inh}= L			4	
I_{ss}	Total quiescent logic supply current	V_i = L I_o = 0 V_{inh}= H		44	60	mA
		V_i = H I_o = 0 V_{inh}= H		16	22	
		V_{inh}= L		16	24	
V_{iL}	Input low voltage		-0.3		1.5	V
V_{iH}	Input high voltage	$V_{ss} \leqslant 7V$	2.3		V_{ss}	V
		$V_{ss} > 7V$	2.3		7	
I_{iL}.	Low voltage input current	V_i = L			-10	μA
I_{iH}	High voltage input current	V_i = H		30	100	μA
V_{inhL}	Inhibit low voltage		-0.3		1.5	V
V_{inhH}	Inhibit high voltage	$V_{ss} \leqslant 7V$	2.3		V_{ss}	V
		$V_{ss} > 7V$	2.3		7	
I_{inhL}	Low voltage inhibit current			-30	-100	μA
I_{inhH}	High voltage inhibit current				± 10	μA
V_{CEsatH}	Source output saturation voltage	I_o = -1A		1.4	1.8	V
V_{CEsatL}	Sink output saturation voltage	I_o = 1A		1.2	1.8	V
V_{SENS}	Sensing Voltage (pins 4, 7, 14, 17) (**)				2	V
t_r	Rise time	0.1 to 0.9 V_o (*)		250		ns
t_f	Fall time	0.9 to 0.1 V_o (*)		250		ns
→ t_{on}	Turn-on delay	0.5 V_i to 0.5 V_o (*)		750		ns
t_{off}	Turn-off delay	0.5 V_i to 0.5 V_o (*)		200		ns

(*) See fig. 1.

(**) Referred to L293E.

TRUTH TABLE

V_i (each channel)	V_o	$V_{inh.}$ (°°)
H	H	H
L	L	H
H	X (°)	L
L	X (°)	L

(°) High output impedance.
(°°) Relative to the considerate channel.

Fig. 1 - Switching times

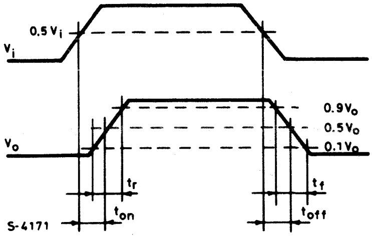

Fig. 2 - Saturation voltage vs. output current

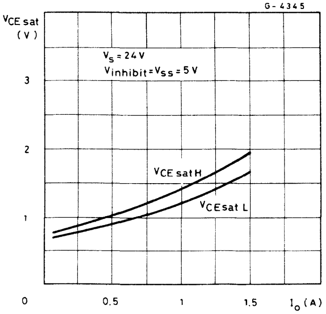

Fig. 3 - Source saturation voltage vs. ambient temperature

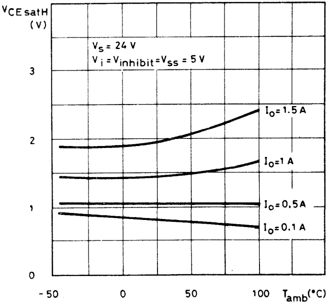

Fig. 4 - Sink saturation voltage vs. ambient temperature

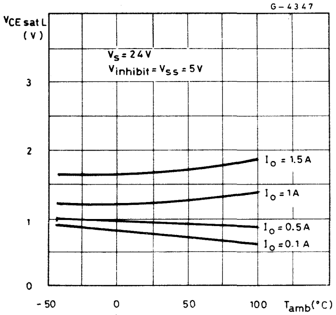

Fig. 5 - Quiescent logic supply current vs. logic supply voltage

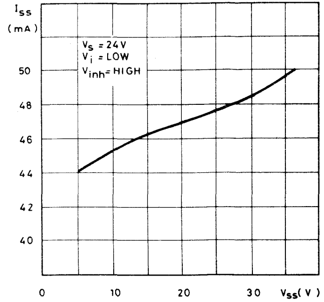

Fig. 6 - Output voltage vs. input voltage

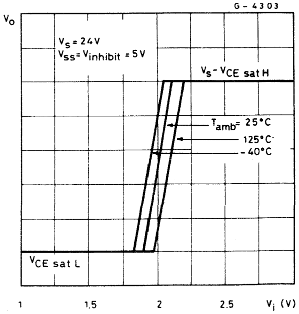

Fig. 7 - Output voltage vs. inhibit voltage

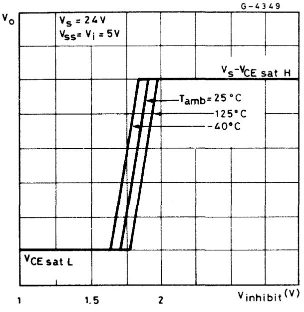

APPLICATION INFORMATION

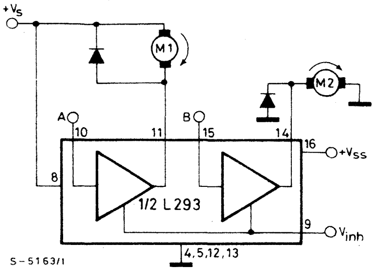

Fig. 8 - DC motor controls (with connection to ground and to the supply voltage)

V_{inh}	A	M1	B	M2
H	H	Fast motor stop	H	Run
H	L	Run	L	Fast motor stop
L	X	Free running motor stop	X	Free running motor stop

L = Low H = High X = Don't care

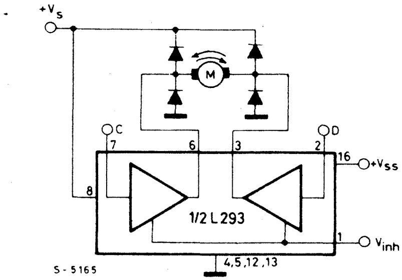

Fig. 9 - Bidirectional DC motor control

INPUTS		FUNCTION
V_{inh}= H	C = H; D = L	Turn right
	C = L; D = H	Turn left
	C = D	Fast motor stop
V_{inh}= L	C = X; D = X	Free running motor stop

L = Low H = High X = Don't care

Fig. 10 - Bipolar stepping motor control

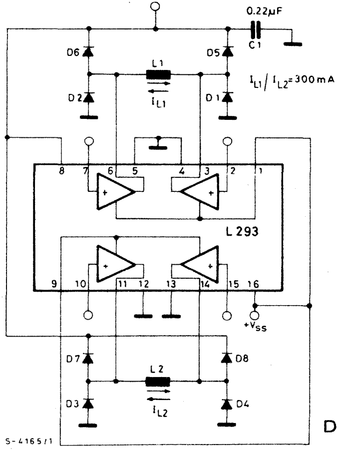

D1 - D8 = $\left\{ \begin{array}{l} V_F \leq 1.2V \text{ @ } I = 300 \text{ mA} \\ trr \leq 500 \text{ ns} \end{array} \right.$

APPLICATION INFORMATION (continued)

Fig. 11 - Stepping motor driver with phase current control and short circuit protection

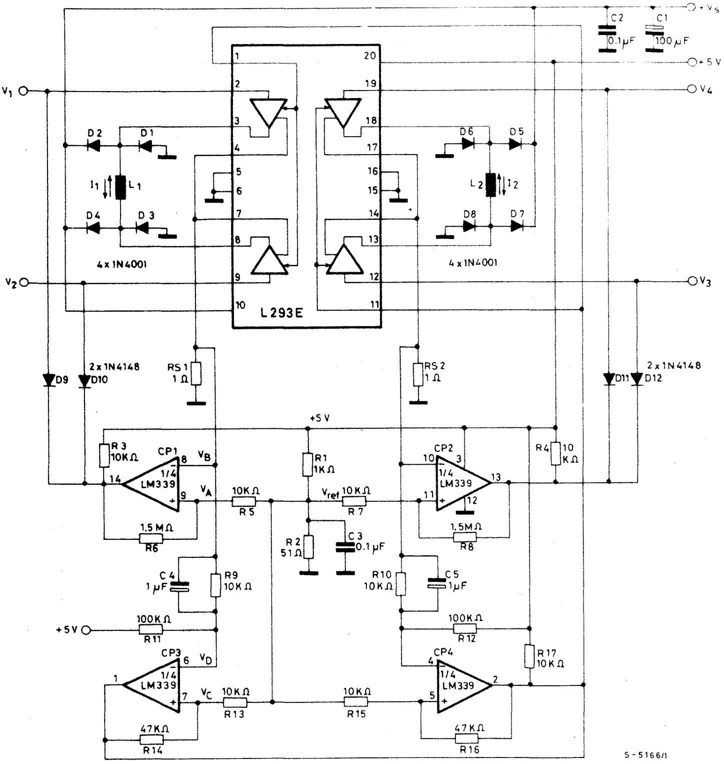

D1 to D8 : $\begin{cases} V_F \leqslant 1.2V \ @ \ I = 300 \text{ mA} \\ trr \leqslant 200 \text{ ns} \end{cases}$

MOUNTING INSTRUCTIONS

The $R_{thj-amb}$ of the L293 and the L293E can be reduced by soldering the GND pins to a suitable copper area of the printed circuit board or to an external heatsink.

The diagram of fig. 13 shows the maximum dissipable power P_{tot} and the $R_{thj-amb}$ as a function of the side "ℓ" of two equal square copper areas having a thickness of 35 μ (see fig. 12). In addition, it is possible to use an external heatsink (see fig. 14).

During soldering the pins temperature must not exceed 260°C and the soldering time must not be longer than 12 seconds.

The external heatsink or printed circuit copper area must be connected to electrical ground.

Fig. 12 - Example of P.C. board copper area which is used as heatsink

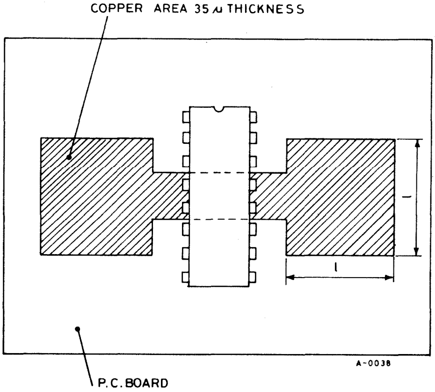

Fig. 13 - Max. dissipable power and junction to ambient thermal resistance vs. size "ℓ"

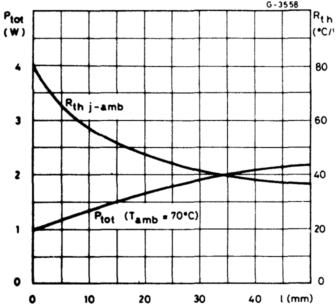

Fig. 14 - External heatsink mounting example (R_{th} = 30 °C/W)

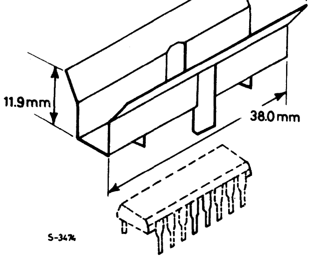

Fig. 15 - Maximum allowable power dissipation vs. ambient temperature

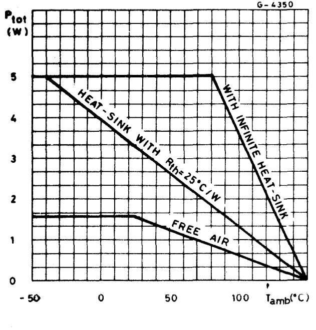

LINEAR INTEGRATED CIRCUITS

SGS **L293D**

ADVANCE DATA

PUSH-PULL FOUR CHANNEL DRIVER WITH DIODES

- 600mA OUTPUT CURRENT CAPABILITY PER CHANNEL
- 1.2A PEAK OUTPUT CURRENT (NON REPETITIVE) PER CHANNEL
- ENABLE FACILITY
- OVERTEMPERATURE PROTECTION
- LOGICAL "0" INPUT VILTAGE UP TO 1.5V (HIGH NOISE IMMUNITY)
- INTERNAL CLAMP DIODES

The L293D is a monolithic integrated high voltage, high current four channel driver designed to accept standard DTL or TTL logic levels and drive inductive loads (such as relays solenoides, DC and stepping motors) and switching power transistors.

To simplify use as two bridges each pair of channels is equipped with an enable input. A separate supply input is provided for the logic, allowing operation at a lower voltage and internal clamp diodes are included.

This device is suitable for use in switching applications at frequencies up to 5 kHz.

The L293D is assembled in a 16 lead plastic package which has 4 center pins connected together and used for heatsinking.

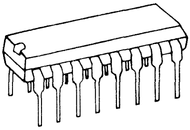

DIP 16-lead
(P001-V)

ORDERING NUMBER: L293D

BLOCK DIAGRAM

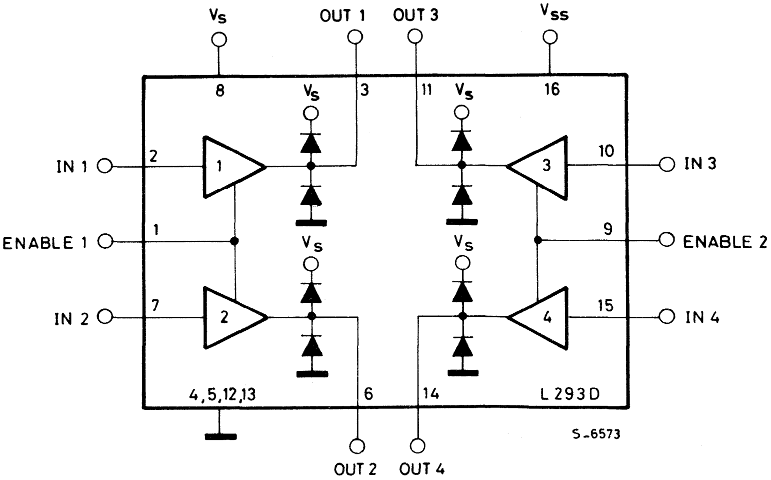

ABSOLUTE MAXIMUM RATINGS

V_S	Supply voltage	36	V
V_{SS}	Logic supply voltage	36	V
V_i	Input voltage	7	V
V_{en}	Enable voltage	7	V
I_o	Peak output current (100μs non repetitive)	1.2	A
P_{tot}	Total power dissipation at $T_{ground-pins} = 80°C$	5	W
T_{stg}, T_j	Storage and junction temperature	-40 to 150	°C

CONNECTION DIAGRAM

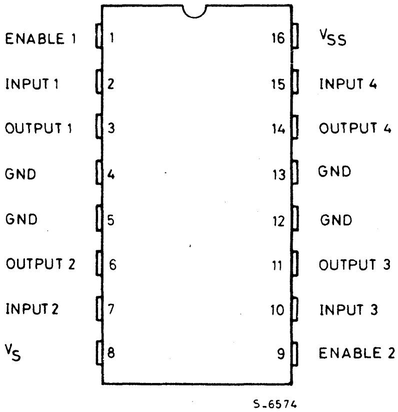

THERMAL DATA

$R_{th\ j-case}$	Thermal resistance junction-case	max	14	°C/W
$R_{th\ j-amb}$	Thermal resistance junction-ambient	max	80	°C/W

ELECTRICAL CHARACTERISTICS (For each channel, V_s = 24V, V_{ss} = 5V, T_{amb}= 25°C, unless otherwise specified)

Parameter		Test condition	Min.	Typ.	Max.	Unit
V_s	Supply voltage (pin 8)		V_{SS}		36	V
V_{ss}	Logic supply voltage (pin 16)		4.5		36	V
I_s	Total quiescent supply current (pin 8)	V_i = L I_o = 0 V_{en} = H		2	6	mA
		V_i = H I_o = 0 V_{en} = H		16	24	
		V_{en} = L			4	
I_{ss}	Total quiescent logic supply current (pin 16)	V_i = L I_o = 0 V_{en} = H		44	60	mA
		V_i = H I_o = 0 V_{en}= H		16	22	
		V_{en} = L		16	24	
V_{IL}	Input low voltage (pin 2, 7, 10, 15)		-0.3		1.5	V
V_{IH}	Input high voltage (pin 2, 7, 10, 15)	$V_{SS} \leqslant 7V$	2.3		V_{SS}	V
		$V_{SS} > 7V$	2.3		7	
I_{IL}	Low voltage input current (pin 2, 7, 10, 15)	V_i = L			-10	μA
I_{IH}	High voltage input current (pin 2, 7, 10, 15)	V_i = H		30	100	μA
V_{enL}	Enable low voltage (pin 1, 9)		-0.3		1.5	V
V_{enH}	Enable high voltage (pin 1, 9)	$V_{SS} \leqslant 7V$	2.3		V_{SS}	V
		$V_{SS} > 7V$	2.3		7	
I_{enL}	Low voltage enable current current (pin 1, 9)			-30	-100	μA
i_{enH}	High voltage enable current (pin 1, 9)				± 10	μA
V_{CEsatH}	Source output saturation voltage (pins 3, 6, 11, 14)	I_o = - 0.6A		1.4	1.8	V
V_{CEsatL}	Sink output saturation voltage (pins 3, 6, 11, 14)	I_o = + 0.6A		1.2	1.8	V
V_F	Clamp diode forward voltage	I_o = 600 mA		1.3		V
t_r	Rise time (*)	0.1 to 0.9 V_o		250		ns
t_f	Fall time (*)	0.9 to 0.1 V_o		250		ns
t_{on}	Turn-on delay (*)	0.5 V_i to 0.5 V_o		750		ns
t_{off}	Turn-off delay (*)	0.5 V_i to 0.5 V_o		200		ns

(*) See fig. 1

TRUTH TABLE (One channel)

INPUT	ENABLE (*)	OUTPUT
H	H	H
L	H	L
H	L	Z
L	L	Z

Z = High output impedance
(*) Relative to the considered channel

Fig. 1 – Switching Times

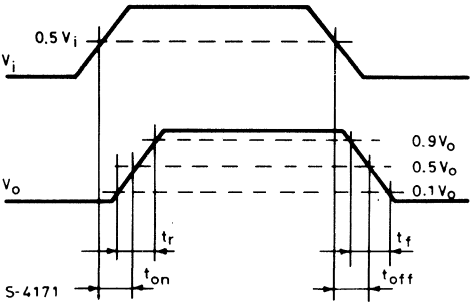

MECHANICAL DATA (Dimensions in mm)

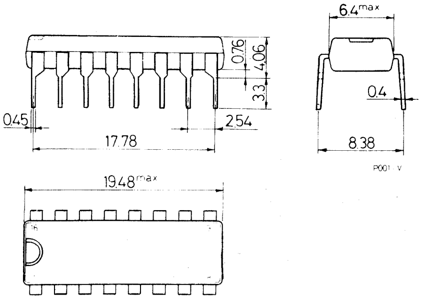

LINEAR INTEGRATED CIRCUITS

SGS **L294**

PRELIMINARY DATA

SWITCHMODE SOLENOID DRIVER

- HIGH VOLTAGE OPERATION (UP TO 50V)
- HIGH OUTPUT CURRENT CAPABILITY (UP TO 4A)
- LOW SATURATION VOLTAGE
- TTL - COMPATIBLE INPUT
- OUTPUT SHORT CIRCUIT PROTECTION (TO GROUND, TO SUPPLY AND ACROSS THE LOAD)
- THERMAL SHUTDOWN
- OVERDRIVING PROTECTION
- LATCHED DIAGNOSTIC OUTPUT.

The L294 is a monolithic switchmode solenoid driver designed for fast, high-current applications such as hammer and needle driving in printers and electronic typewriters. Power dissipation is reduced by efficient switchmode operation. An extra feature of the L294 is a latched diagnostic output which indicates when the output is short circuited.
The L294 is supplied in an 11-lead Multiwatt® plastic power package.

ABSOLUTE MAXIMUM RATING

V_s	Power supply voltage	50	V
V_{ss}	Logic supply voltage	7	V
V_{EN}	Enable voltage	7	V
V_i	Input voltage	7	V
I_p	Peak output current (repetitive)	4.5	A
P_{tot}	Total power dissipation (at T_{case}= 75°C)	25	W
T_{stg}, T_j	Storage and junction temperature	-40 to 150	°C

ORDERING NUMBER: L294

MECHANICAL DATA

Dimensions in mm

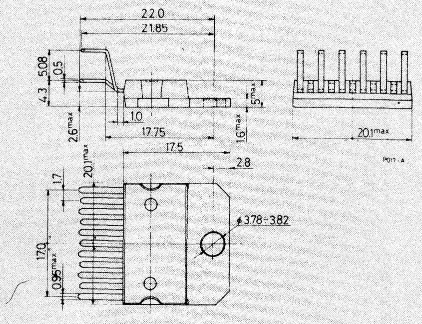

CONNECTION DIAGRAM

(top view)

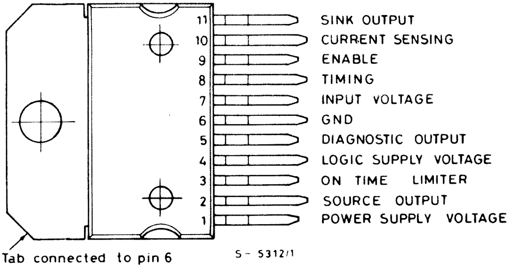

BLOCK DIAGRAM

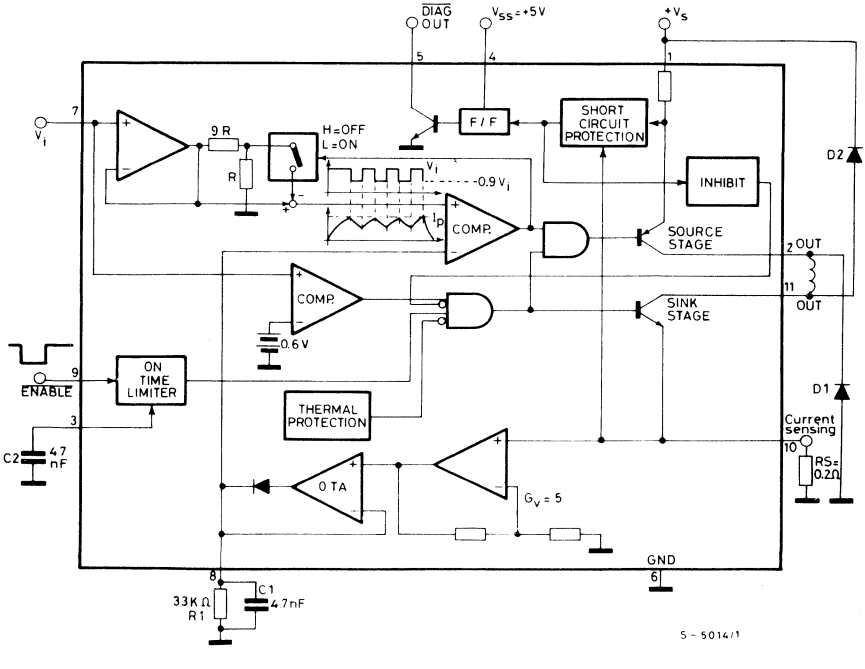

THERMAL DATA

$R_{th\ j\text{-}case}$	Thermal resistance junction-case	max	3	°C/W

ELECTRICAL CHARACTERISTICS

(Refer to the test circuit, $V_s = 40V$, $V_{ss} = 5V$, $T_{amb} = 25°C$, unless otherwise specified).

Parameter		Test conditions	Min.	Typ.	Max.	Unit
V_s	Power supply voltage (pin 1)	Operative condition	12		46	V
I_d	Quiescent drain current (pin 1)	$V_{ENABLE} = H$		20	30	mA
		$V_i \geq 0.6V$; $V_{ENABLE} = L$		70		
V_{ss}	Logic supply voltage (pin 4)		4.5		7	V
I_{ss}	Quiescent logic supply current	$V_{DIAG} = L$		5	8	mA
		DIAG output at high impedance		10	100	µA
V_i	Input voltage (pin 7)	Operating output	0.6			V
		Non-operative output			0.45	
I_i	Input current (pin 7)	$V_i \geq 0.6V$		-1		µA
		$V_i \leq 0.45V$		-3		
V_{ENABLE}	Enable input voltage (pin 9)	Low level	-0.3		0.8	V
		High level	2.4			
I_{ENABLE}	Enable input current (pin 9)	$V_{ENABLE} = L$			-100	µA
		$V_{ENABLE} = H$			100	
I_{load}/V_i	Transconductance	$R_s = 0.2\ \Omega$ $V_i = 1V$	0.95	1	1.05	A/V
		$V_i = 4V$	0.97	1	1.03	
$V_{sat\ H}$	Source output saturation voltage	$I_p = 4A$		1.7		V
$V_{sat\ L}$	Sink output saturation voltage	$I_p = 4A$		2		V
$V_{sat\ H} + V_{sat\ L}$	Total saturation voltage	$I_p = 4A$			4.5	V
$I_{leakage}$	Output leakage current	$R_s = 0.2\Omega$; $V_i \leq 0.45V$		1		mA
K	On time limiter constant (°)	$V_{ENABLE} = L$		120		KΩ
V_{DIAG}	Diagnostic output voltage (pin 5)	$I_{DIAG} = 10\ mA$			0.4	V
I_{DIAG}	Diagnostic leakage current (pin 5)	$V_{DIAG} = 40V$			10	µA
$\frac{V_{pin\ 8}}{V_{pin\ 10}}$	OP AMP and OTA DC voltage gain (°°)	$V_{pin\ 10} = 100$ to $800\ mV$		5		
V_{SENS}	Sensing voltage (pin 10) (°°°)				0.9	V

(°) After a time interval $t_{max} = KC_2$, the output stages are disabled.

(°°) See the block diagram.

(°°°) Allowed range of V_{SENS} without the intervention of the short circuit protection.

CIRCUIT OPERATION

The L294 works as a transconductance amplifier: it can supply an output current directly proportional to an input voltage level (V_i). Furthermore, it allows complete switching control of the output current waveform (see fig. 1).
The following explanation refers to the Block Diagram, to fig. 1 and to the typical application circuit of fig. 3.
The t_{on} time is fixed by the width of the Enable input signal (TTL compatible): it is active low and enables the output stages "source" and "sink". At the end of t_{on}, the load current I_{load} recirculates through D1 and D2, allowing fast current turn-off.
The rise time t_r depends on the load characteristics, on V_i and on the supply voltage value (V_s, pin 1). During the t_{on} time, I_{load} is converter into a voltage signal by means of the external sensing resistance R_s connected to pin 10. This signal, amplified by the op amp and converted by the transconductance amplifier OTA, charges the external RC network at pin 8 (R1, C1). The voltage at this pin is sensed by the inverting input of a comparator. The voltage on the non-inverting input of this one is fixed by the external voltage V_i (pin 7).
After t_r, the comparator switches and the output stage "source" is switched off. The comparator output is confirmed by the voltage on the non-inverting input, which decreases of a constant fraction of V_i (1/10), allowing hysteresis operation. The current in the load now flows through D1.
Two cases are possible: the time constant of the recirculation phase is higher than R1. C1; the time constant is lower than R1.C1. In the first case, the voltage sensed on the non-inverting input of the comparator is just the value proportional to I_{load}. In the second case, when the current decreases too quickly, the comparator senses the voltage signal stored in the R1 C1 network.
In the first case t_1 depends on the load characteristics, while in the second case it depends only on the value of R1.C1.
In other words, R1.C1 fixes the minimum value of t_1 ($t_1 \geqslant 1/10$ R1.C1. Note that C1 should be chosen in the range 2.7 to 10 nF for stability reasons of the OTA).
After t_1, the comparator switches again: the output is confirmed by the voltage on the non-inverting input, which reaches V_i again (hysteresis).
Now the cycle starts again: t_2, t_4 and t_6 have the same characteristics as t_r, while t_3 and t_5 are similar to t_1. The peak current I_p depends on V_i as shown in the typical transfer function of fig. 2.
It can be seen that for V_i lower than 450 mV the device is not operating.
For V_i greater than 600 mV, the L294 has a transconductance of 1A/V with $R_s = 0.2\Omega$. For V_i included between 450 and 600 mV, the operation is not guaranteed.
The other parts of the device have protection and diagnostic functions. At pin 3 is connected an external capacitor C2, charged at constant current when the Enable is low.
After a time interval equal to K · C2 (K is defined in the table of Electrical Characteristics and has the dimensions of ohms) the output stages are switched off independently by the Input signal.
This avoids the load being driven in conduction for an excessive period of time (overdriving protection). The action of this protection is shown in fig. 1b. Note that the voltage ramp at pin 3 starts whenever the Enable signal becomes active (low state), regardless of the Input signal. To reset pin 3 and to restore the normal conditions, pin 9 must return high.
This protection can be disabled by grounding pin 3.
The thermal protection included in the L294 has a hysteresis.
It switches off the output stages whenever the junction temperature increases too much. After a fall of about 20°C, the circuit starts again.
Finally, the device is protected against any type of short circuit at the outputs: to ground, to supply and across the load.
When the source stage current is higher than 5A and/or when the pin 10 voltage is higher then 1V (i.e. for a sink current greater than $1V/R_s$) the output stages are switched off and the device is inhibited.
This condition is indicated at the open-collector output DIAG (pin 5); the internal flip-flop F/F changes and forces the output transistor into saturation. The F/F must be supplied independently through V_{ss} (pin 4). The DIAG signal is reset and the output stages are still operative by switching off the supply

CIRCUIT OPERATION (continued)

voltage at pin 1 and then by switching the device on again. After that, two cases are possible: the reason for the "bad operation" is still present and the protection acts again; the reason has been removed and the device starts to work properly.

Fig. 1 - Output current waveforms

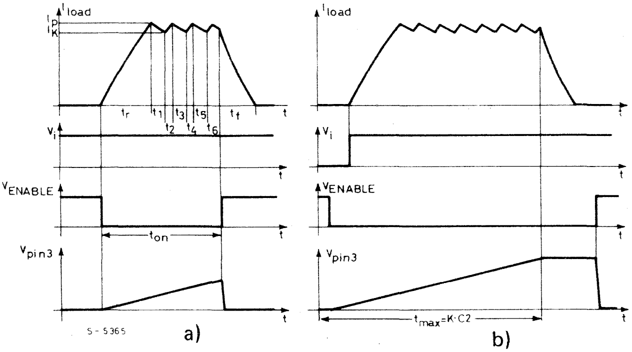

a) b)

Fig. 2 - Peak output current vs. input voltage

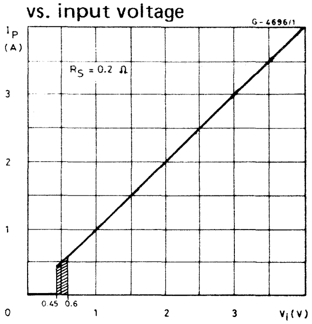

Fig. 3 - Test and typical application circuit

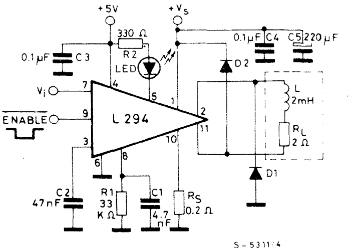

D1: 3A fast diode
D2: 1A fast diode
} trr ≤ 200 ns

Fig. 4 - Output saturation voltages vs. peak output current

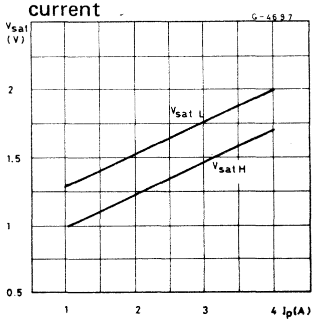

Fig. 5 - Safe operating areas

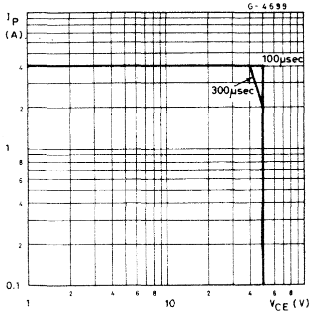

Fig. 6 - Turn-off phase

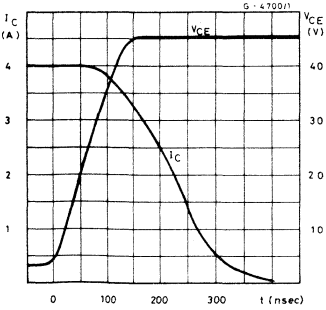

CALCULATION OF THE SWITCHING TIMES

Referring to the block diagram and to the waveforms of fig. 1, it is possible to calculate the switching times by means of the following relationships.

$$t_r = -\frac{L}{R_L} \ln \left(1 - \frac{R_L}{V1} \cdot I_p\right) \qquad \text{where: } V1 = V_s - V_{satL} - V_{satH} - V_{R\,sens}$$

$$t_f = -\frac{L}{R_L} \ln \frac{V2}{V2 + R_L \cdot I_o} \qquad \text{where: } V2 = V_s + V_{D1} + V_{D2}$$

$I_K \leqslant I_o \leqslant I_p$

I_o is the value of the load current at the end of t_{on}.

$$t_1 = t_3 = t_5 = \ldots = \begin{cases} \text{a) } -\dfrac{L}{R_L} \ln \dfrac{0.9\, I_p \cdot R_L + V3}{I_p\, R_L + V3} & \text{where } V3 = V_{satL} + V_{R\,sens} + V_{D1} \\ \text{b) } -R1\,C1 \ln 0.9 \cong \dfrac{1}{10}\, R1\,C1 & \end{cases}$$

$$t_2 = t_4 = t_6 = \ldots = -\frac{L}{R_L} \ln \left(\frac{V1 - I_p\, R_L}{V1 - I_K\, R_L}\right)$$

Note that the time interval $t_1 = t_3 = t_5 = \ldots$ takes the longer value between case a) and case b). The switching frequency is always:

$$f_{switching} = \frac{1}{t_1 + t_2}$$

In the case a) the main regulation loop is always closed and it forces:

$$I_K = (0.9 \pm S)\, I_p \qquad \text{where: } \begin{array}{l} S = 3\% \ @\ V_i = 1V \\ S = 1.5\% \ @\ V_i = 4V \end{array}$$

In the case b), the same loop is open in the recirculation phase and I_K, which is always lower than 0.9 I_p, is obtained by means of the following relationship.

$$I_K = I_p\, e^{-\frac{t_1\, R_L}{L}} - \frac{V3}{R_L} \left(1 - e^{-\frac{t_1\, R_L}{L}}\right)$$

With the typical application circuit, in the conditions $V_s = 40V$, $I_p = 4A$, the following switching times result:

$t_r = 255\ \mu s$ $\qquad$ $t_f = 174\ \mu s$ @ $I_o = I_p$

$t_1 =$ a) $70\ \mu s$ b) $16\ \mu s$ $\qquad$ $t_2 = 29\ \mu s$ $\qquad$ f = 10.2 KHz

LINEAR INTEGRATED CIRCUITS

SGS **L295**

DUAL SWITCHMODE SOLENOID DRIVER

ADVANCE DATA

- HIGH CURRENT CAPABILITY (UP TO 2.5A PER CHANNEL)
- HIGH VOLTAGE OPERATION (UP TO 46V FOR POWER STAGE)
- HIGH EFFICIENCY SWITCHMODE OPERATION
- REGULATED OUTPUT CURRENT (ADJUSTABLE)
- FEW EXTERNAL COMPONENTS
- SEPARATE LOGIC SUPPLY
- THERMAL PROTECTION

The L295 is a monolithic integrated circuit in a 15-lead Multiwatt® package; it incorporates all the functions for direct interfacing between digital circuitry and inductive loads. The L295 is designed to accept standard microprocessor logic levels at the inputs and can drive 2 solenoids. The output current is completely controlled by means of a switching technique allowing very efficient operation. Furthermore, it includes an enable input and dual supplies (for interfacing with peripherals running at a higher voltage than the logic).

The L295 is particularly suitable for applications such as hammer driving in matrix printers, step motor driving and electromagnet controllers.

ABSOLUTE MAXIMUM RATINGS

V_s	Supply voltage	50	V
V_{ss}	Logic supply voltage	12	V
V_{EN}, V_i	Enable and input voltage	7	V
V_{ref}	Reference voltage	7	V
I_o	Peak output current (each channel)		
	– non repetitive ($t = 100\ \mu sec$)	3	A
	– repetitive (80% on -20% off; $t_{on} = 10$ ms)	2.5	A
	– DC operation	2	A
P_{tot}	Total power dissipation (at $T_{case} = 75°C$)	25	W
T_{stg}, T_j	Storage and junction temperature	-40 to 150	°C

ORDERING NUMBER : L295

MECHANICAL DATA

Dimensions in mm

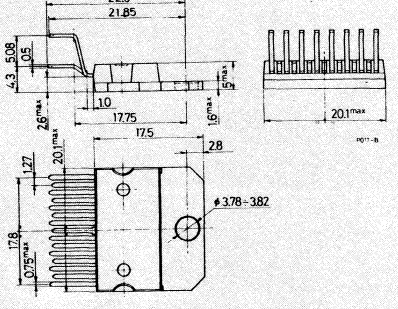

CONNECTION DIAGRAM

(top view)

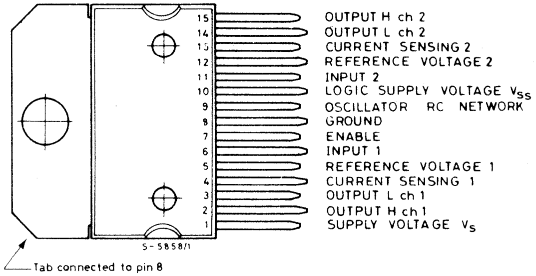

BLOCK DIAGRAM

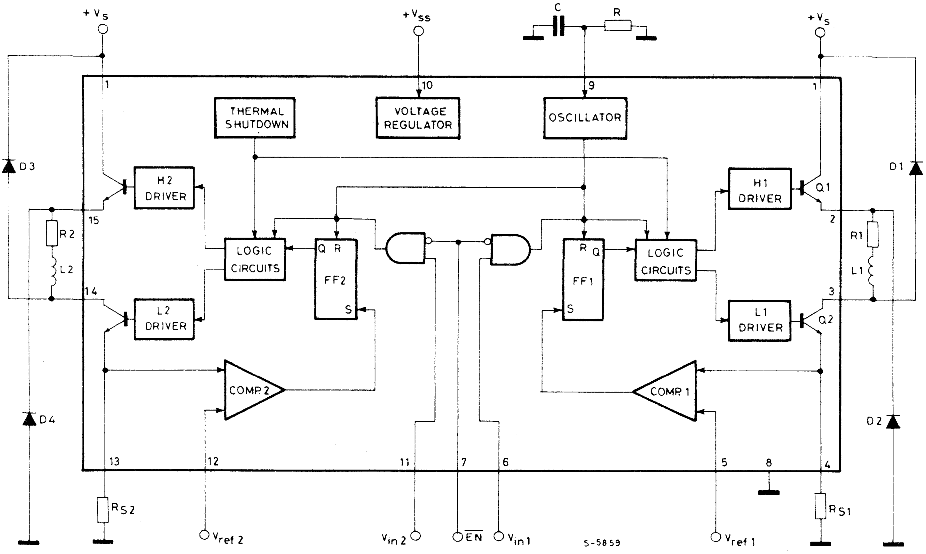

THERMAL DATA

$R_{th\ j\text{-}case}$	Thermal resistance junction-case	max	3	°C/W
$R_{th\ j\text{-}amb}$	Thermal resistance junction-ambient	max	35	°C/W

ELECTRICAL CHARACTERISTICS (Refer to the application circuit, V_{SS}= 5V; V_s= 36V; T_j = 25°C; L = low; H = high; unless otherwise specified)

Parameter		Test conditions		Min.	Typ.	Max.	Unit
V_s	Supply Voltage			12		46	V
V_{ss}	Logic Supply voltage			4.75		10	V
I_d	Quiescent drain current (from V_s)	V_s = 46V; V_{i1}= V_{i2}= V_{EN}= L				4	mA
I_{ss}	Quiescent drain current (from V_{ss})	V_{ss} = 10V				46	mA
V_{i1}, V_{i2}	Input Voltage		Low	-0.3		0.8	V
			High	2.2		7	
V_{EN}	Enable Input Voltage		Low	-0.3		0.8	V
			High	2.2		7	
I_{i1}, I_{i2}	Input Current		V_{i1}= V_{i2}= L			-100	μA
			V_{i1}= V_{i2}= H			10	
I_{EN}	Enable Input Current		V_{EN}= L			-100	μA
			V_{EN}= H			10	
V_{ref1}, V_{ref2}	Input Reference Voltage			0.2		2	V
I_{ref1}, I_{ref2}	Input Reference Current					-5	μA
f_{osc}	Oscillation Frequency	C = 3.9 nF;	R = 9.1 KΩ		25		KHz
$\frac{I_p}{V_{ref}}$	Transconductance (each ch.)	V_{ref}= 1V	R_s = 0.5Ω	1.9	2	2.1	A/V
V_{drop}	Total output voltage drop (each channel) (*)	I_o = 2A			2.8	3.6	V
$V_{sens\ 1}$, $V_{sens\ 2}$	External sensing resistors voltage drop					2	V

(*) V_{drop}= $V_{CEsat\ Q1}$ + $V_{CEsat\ Q2}$.

APPLICATION CIRCUIT

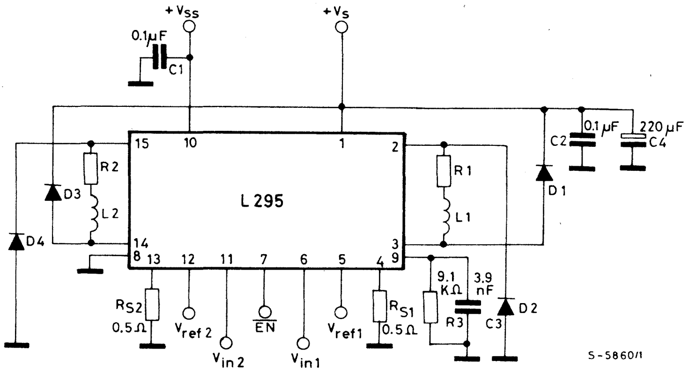

D2, D4 = 2A High speed diodes } trr ≤ 200 ns
D1, D3 = 1A High speed diodes }

R1 = R2 = 2Ω
L1 = L2 = 5 mH

FUNCTIONAL DESCRIPTION

The L295 incorporates two independent driver channels with separate inputs and outputs, each capable of driving an inductive load (see block diagram).

The device is controlled by three microprocessor compatible digital inputs and two analog inputs. These inputs are:

$\overline{EN}$	chip enable (digital input, active low), enables both channels when in the low state.
V_{in1}, V_{in2}	channel inputs (digital inputs, active high), enable each channel independently. A channel is activated when both $\overline{EN}$ and the appropriate channel input are active.
V_{ref1}, V_{ref2}	reference voltages (analog inputs), used to program the peak load currents. Peak load current is proportional to V_{ref}.

Since the two channels are identical, only channel one will be described.
The following description applies also the channel two, replacing FF2 for FF1, V_{ref2} for V_{ref1} etc. When the channel is activated by a low level on the $\overline{EN}$ input and a high level on the channel input, V_{in2}, the output transistors Q1 and Q2 switch on and current flows in the load according to the exponential law:

$$I = \frac{V}{R1}\left(1 - e^{\frac{-R1\,t}{L1}}\right)$$

where: R1 and L1 are the resistance and inductance of the load and V is the voltage available on the load (V_s - V_{drop} - V_{sense}).

The current increases until the voltage on the external sensing resistor, R_{S1}, reaches the reference voltage, V_{ref1}. This peak current, I_{p1}, is given by:

$$I_{p1} = \frac{V_{ref1}}{R_{S1}}$$

At this point the comparator output, Comp1, sets the RS flip-flop, FF1, that turns off the output transistor, Q1. The load current flowing through D2, Q2, R_{S1}, decreases according to the law:

$$I = \left(\frac{V_A}{R1} + I_{p1}\right) e^{\frac{-R1\,t}{L1}} - \frac{V_A}{R1}$$

where $$V_A = V_{CEsat\ Q2} + V_{sense\ 1} + V_{D2}$$

If the oscillator pin (9) is connected to ground the load current falls to zero as shown in fig. 1.

At the time t_2 the channel 1 is disabled, by taking the inputs V_{in1} low and/or $\overline{EN}$ high, and the output transistor Q2 is turned off. The load current flows through D2 and D1 according to the law:

$$I = \left(\frac{V_B}{R1} + I_{T2}\right) e^{\frac{-R1\,t}{L1}} - \frac{V_B}{R1}$$

where $$V_B = V_s + V_{D1} + V_{D2}$$

I_{T2} = current value at the time t_2.

Fig. 2 in shows the current waveform obtained with an RC network connected between pin 9 and ground. From to t_1 the current increases as in fig. 1. A difference exists at the time t_2 because the current starts to increase again. At this time a pulse is produced by the oscillator circuit that resets the flip flop, FF1, and switches on the output transistor, Q1. The current increases until the drop on the sensing resistor R_{s1} is equal to V_{ref1} (t_3) and the cycle repeats.

The switching frequency depends on the values of R and C, as shown in fig. 4 and must be chosen in the range 10 to 30 KHz.
It is possible with external hardware to change the reference voltage V_{ref} in order to obtain a high peak current I_p and a lower holding current I_h (see fig. 3).

The L295 is provided with a thermal protection that switches off all the output transistors when the junction temperature exceeds 150°C. The presence of a hysteresis circuit makes the IC work again after a fall of the junction temperature of about 20°C.

The analog input pins (V_{ref1}, V_{ref2}) can be left open or connected to V_{ss}; in this case the circuit works with an internal reference voltage of about 2.5V and the peak current in the load is fixed only by the value of R_S:

$$I_p = \frac{2.5}{R_S}$$

SIGNAL WAVEFORMS

Fig. 1 - Load current waveform with pin 9 connected to GND.

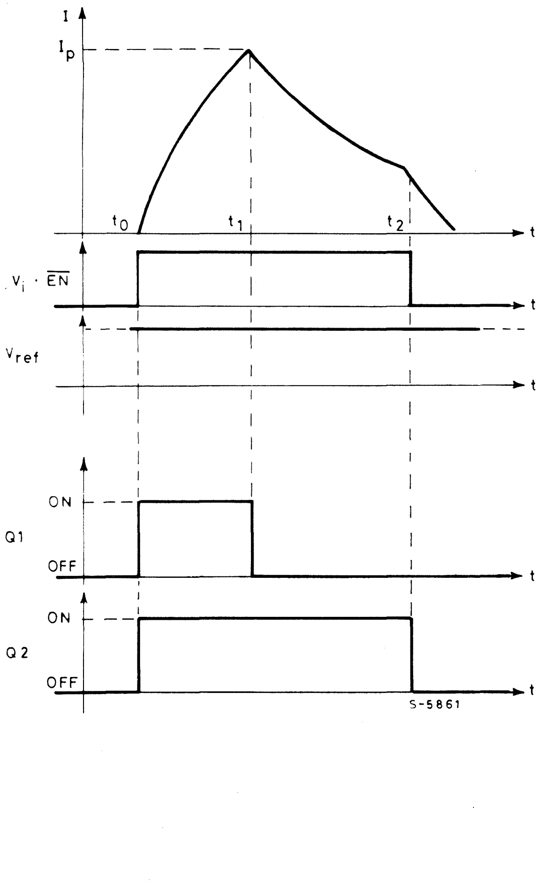

SIGNAL WAVEFORMS (continued)

Fig. 2 - Load current waveform with external R-C network connected between pin 9 and ground.

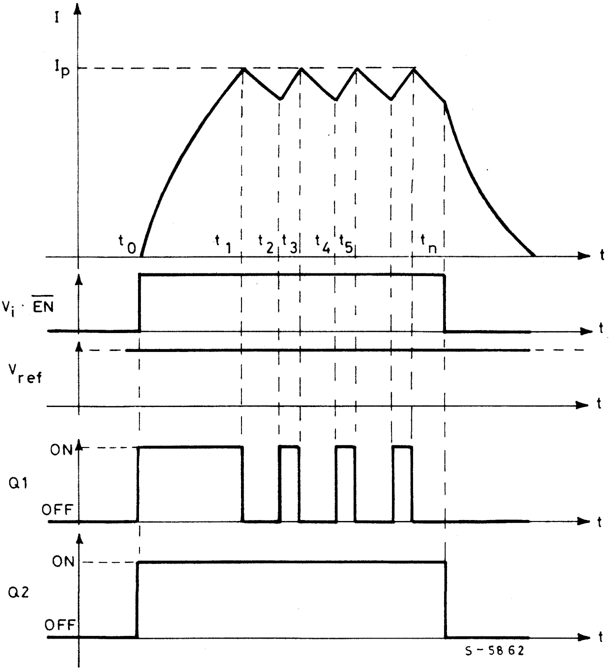

SIGNAL WAVEFORMS (continued)

Fig. 3 - With V_{ref} changed by hardware

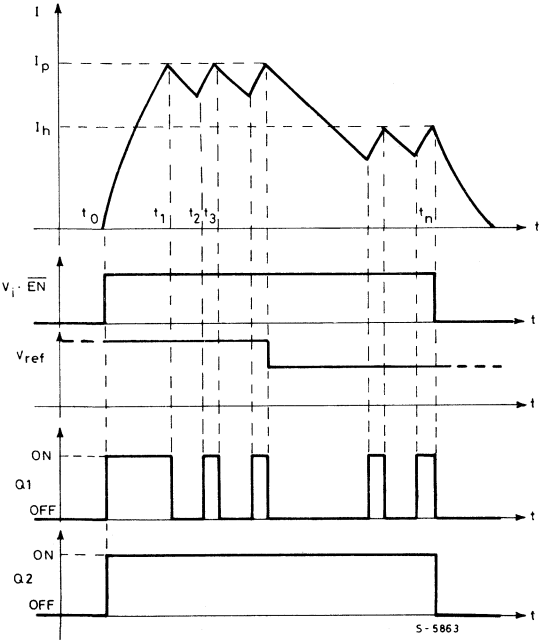

Fig. 4 - Switching frequency vs. values of R and C

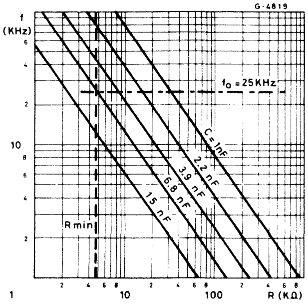

LINEAR INTEGRATED CIRCUITS

L296

HIGH CURRENT SWITCHING REGULATOR

- 4A OUTPUT CURRENT
- 5.1V TO 40V OUTPUT VOLTAGE RANGE
- 0 TO 100% DUTY CYCLE RANGE
- PRECISE (± 2%) ON-CHIP REFERENCE
- SWITCHING FREQUENCY UP TO 200 KHz
- VERY HIGH EFFICIENCY (UP TO 90%)
- VERY FEW EXTERNAL COMPONENTS
- SOFT START
- RESET OUTPUT
- CONTROL CIRCUIT FOR CROWBAR SCR
- INPUT FOR REMOTE INHIBIT AND SYNCHRONUS PWM
- THERMAL SHUTDOWN

The L296 is a stepdown power switching regulator delivering 4A at a voltage variable from 5.1V to 40V.

Features of the device include programmable current limiting, soft start, remote inhibit, thermal protection, a reset output for microprocessors and a PWM comparator input for synchronization in multichip configurations.

The L296 is mounted in a 15-lead Multiwatt® plastic power package and requires very few external components.

Efficient operation at switching frequencies up to 200kHz allows a reduction in the size and cost of external filter components. A voltage sense input and SCR drive output are provided for optional crowbar overvoltage protection with an external SCR.

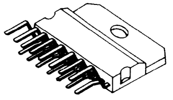

Multiwatt®
(15-lead)

ORDERING NUMBER: L296

BLOCK DIAGRAM

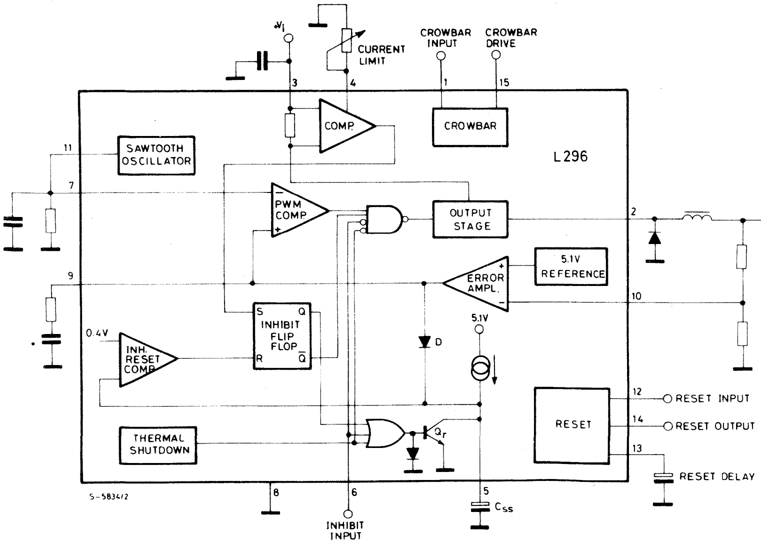

ABSOLUTE MAXIMUM RATINGS

V_i	Input voltage (pin 3)	50	V
$V_i - V_2$	Input to output voltage difference	50	V
V_2	Output DC voltage	-1	V
	Output peak voltage at $t = 0.1\ \mu sec$ $f = 200\ kHz$	-7	V
V_1, V_{12}	Voltage at pins 1, 12	10	V
V_6, V_{15}	Voltage at pins 6, and 15	15	V
V_4, V_5, V_7, V_9	Voltage at pins 4, 5, 7 and 9	5.5	V
V_{10}, V_6	Voltage at pins 10 and 6	7	V
V_{14}	Voltage at pin 14 ($I_{14} \leqslant 1$ mA)	V_i	
I_9	Pin 9 sink current	1	mA
I_{11}	Pin 11 source current	20	mA
I_{14}	Pin 14 sink current ($V_{14} < 5V$)	50	mA
P_{tot}	Power dissipation at $T_{case} \leqslant 90\ ^\circ C$	20	W
T_j, T_{stg}	Junction and storage temperature	-40 to 150	°C

THERMAL DATA

$R_{th\ j\text{-}case}$	Thermal resistance junction-case	max	3	°C/W
$R_{th\ j\text{-}amb}$	Thermal resistance junction-ambient	max	35	°C/W

CONNECTION DIAGRAM

(top view)

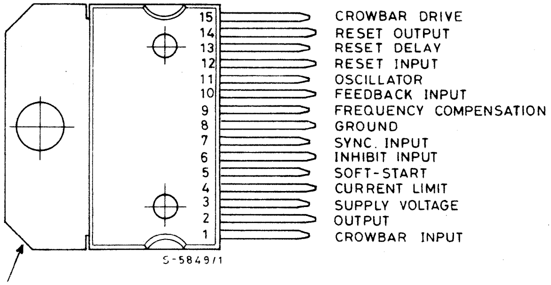

Tab connected to pin 8

PIN FUNCTIONS

N°	NAME	FUNCTION
1	CROWBAR INPUT	Voltage sense input for crowbar overvoltage protection. Normally connected to the feedback input thus triggering the SCR when V_{out} exceeds nominal by 20%. May also monitor the input and a voltage divider can be added to increase the threshold. Connected to ground when SCR not used.
2	OUTPUT	Regulator output.
3	SUPPLY VOLTAGE	Unregulated voltage input. An internal regulator powers the L296's internal logic.
4	CURRENT LIMIT	A resistor connected between this terminal and ground sets the current limiter threshold. If this terminal is left unconnected the threshold is internally set (see electrical charateristics).
5	SOFT START	Soft start time constant. A capacitor is connected between this terminal and ground to define the soft start time constant. This capacitor also determines the average short circuit output current.
6	INHIBIT INPUT	TTL – level remote inhibit. A logic high level on this input disables the L296.
7	SYNC INPUT	Multiple L296s are synchronized by connecting the pin 7 inputs together and omitting the oscillator RC network on all but one device.
8	GROUND	Common ground terminal.
9	FREQUENCY COMPENSATION	A series RC network connected between this terminal and ground determines the regulation loop gain characteristics.
10	FEEDBACK INPUT	The feedback terminal of the regulation loop. The output is connected directly to this terminal for 5.1V operation; it is connected via a divider for higher voltages.
11	OSCILLATOR	A parallel RC network connected to this terminal determines the switching frequency. This pin must be connected to pin 7 input when the internal oscillator is used.

PIN FUNCTIONS (continued)

N°	NAME	FUNCTION
12	RESET INPUT	Input of the reset circuit. The threshold is roughly 5V. It may be connected to the feedback point or via a divider to the input.
13	RESET DELAY	A capacitor connected between this terminal and ground determines the reset signal delay time.
14	RESET OUTPUT	Open collector reset signal output. This output is high when the supply is safe.
15	CROWBAR OUTPUT	SCR gate drive output of the crowbar circuit.

CIRCUIT OPERATION (refer to the block diagram)

The L296 is a monolithic stepdown switching regulator providing output voltages from 5.1V to 40V and delivering 4A.

The regulation loop consists of a sawtooth oscillator, error amplifier, comparator and the output stage. An error signal is produced by comparing the output voltage with a precise 5.1V on-chip reference (zener zap trimmed to ± 2%). This error signal is then compared with the sawtooth signal to generate the fixed frequency pulse width modulated pulses which drive the output stage. The gain and frequency stability of the loop can be adjusted by an external RC network connected to pin 9. Closing the loop directly gives an output voltage of 5.1V. Higher voltages are obtained by inserting a voltage divider.

Output overcurrents at switch on are prevented by the soft start function. The error amplifier output is initially clamped by the external capacitor C_{SS} and allowed to rise, linearly, as this capacitor is charged by a constant current source.

Output overload protection is provided in the form of a current limiter. The load current is sensed by an internal metal resistor connected to a comparator. When the load current exceeds a preset threshold this comparator sets a flip flop which disables the output stage and discharges the soft start capacitor. A second comparator resets the flip flop when the voltage across the soft start capacitor has fallen to 0.4V. The output stage is thus re-enabled and the output voltage rises under control of the soft start network. If the overload condition is still present the limiter will trigger again when the threshold current is reached. The average short circuit current is limited to a safe value by the dead time introduced by the soft start network.

The reset circuit generates an output signal when the supply voltage exceeds a threshold programmed by an external divider. The reset signal is generated with a delay time programmed by an external capacitor. When the supply falls below the threshold the reset output goes low immediately. The reset output is an open collector.

The crowbar circuit senses the output voltage and the crowbar output can provide a current of 100 mA to switch on an external SCR. This SCR is triggered when the output voltage exceeds the nominal by 20%. There is no internal connection between the output and crowbar sense input therefore the crowbar can monitor either the input or the output.

A TTL - level inhibit input is provided for applications such as remote on/off control. This input is activated by high logic level and disables circuit operation. After an inhibit the L296 restarts under control of the soft start network.

The thermal overload circuit disables circuit operation when the junction temperature reaches about 150°C and has hysteresis to prevent unstable conditions.

CIRCUIT OPERATION (continued)

Fig. 1 - Reset output waveforms

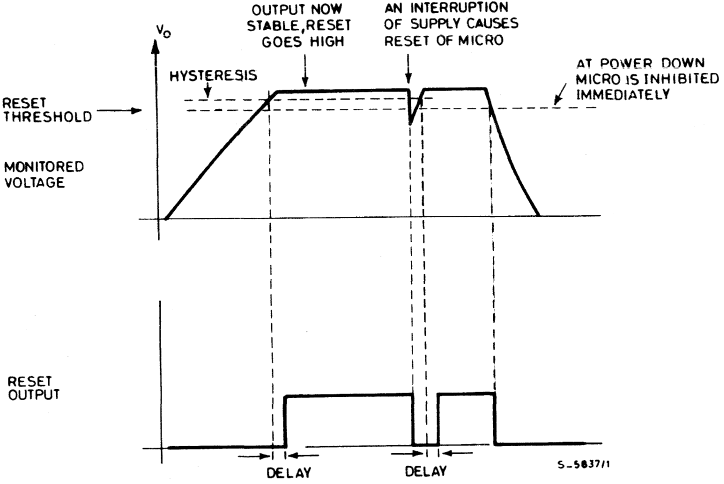

Fig. 2 - Soft start waveforms

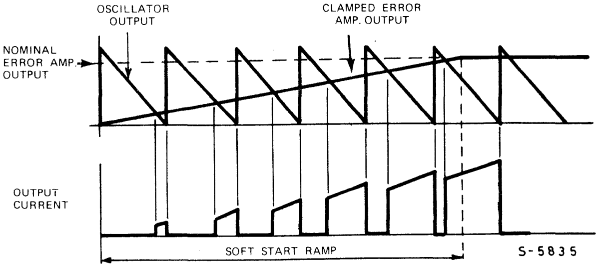

Fig. 3 - Current limiter waveforms

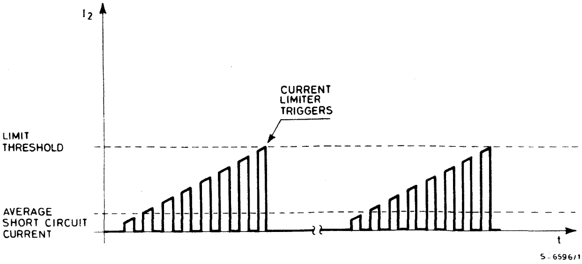

ELECTRICAL CHARACTERISTICS (Refer to the test circuits $T_j = 25°C$, $V_i = 35V$, unless otherwise specified)

Parameter		Test Conditions		Min.	Typ.	Max.	Unit	Fig.
DYNAMIC CHARACTERISTICS (pin 6 to GND unless otherwise specified)								
V_o	Output voltage range	$V_i = 46V$ $I_o = 1A$		V_{ref}		40	V	4
V_i	Input voltage range	$V_o = V_{ref}$ to 36V $I_o = 4A$		9		46	V	4
ΔV_o	Line regulation	V_i=10V to 40V, $V_o = V_{ref}$, $Io = 2A$			15	50	mV	4
ΔV_o	Load regulation	$V_o = V_{ref}$	$I_o = 2A$ to 4A		10	30	mV	4
			I_o=0,5A to 4A		15	45	mV	4
V_{ref}	Internal reference voltage (pin 10)	$V_i = 9V$ to 46V $I_o = 2A$		5	5.1	5.2	V	4
$\frac{\Delta V_{ref}}{\Delta T}$	Average temperature coefficient of reference voltage	$T_j = 0°C$ to 125°C $I_o = 2A$			0.4		mV/°C	
V_d	Dropout voltage between pin 2 and pin 3	$I_o = 4A$			2	3.2	V	4
		$I_o = 2A$			1.3	2.1	V	4
Io_m	Maximum operating load current	$V_i = 9V$ to 46V, $V_o = V_{ref}$ to 36 V		4			A	4
I_{2L}	Current limiting threshold (pin 2)	$V_i = 9V$ to 46V $V_o = V_{ref}$ to 40V	Pin 4 open			8	A	4
			$R_{lim} = 33\ k\Omega$		2.5		A	4
I_{SH}	Input average current	$V_i = 46V$; Output short-circuited			60	100	mA	4
η	Efficiency	$I_o = 3A$	$V_o = V_{ref}$		75		%	4
			$V_o = 12V$		85		%	4
SVR	Supply voltage ripple rejection	$\Delta V_i = 2\ V_{rms}$ $f_{ripple} = 100\ Hz$ $V_o = V_{ref}$ $I_o = 2A$		50	56		dB	4
f	Switching frequency			85	100	115	kHz	4
$\frac{\Delta f}{\Delta V_i}$	Voltage stability of switching frequency	$V_i = 9V$ to 46V			0.5		%	4
$\frac{\Delta f}{\Delta T_j}$	Temperature stability of switching frequency	$T_j = 0°C$ to 125°C			1		%	4
f_{max}	Maximum operating switching frequency	$V_o = V_{ref}$ $I_o = 1A$		200			kHz	–
T_{sd}	Thermal shutdown junction temperature			135	145		°C	–
DC CHARACTERISTICS								
I_{3Q}	Quiescent drain current	$V_i = 46V$ V_7= 0V S1:B S2:B	$V_6 = 0V$		66	85	mA	6a
			$V_6 = 3V$		30	40	mA	6a
$-I_{2L}$	Output leakage current	$V_i = 46V$,V6=3V,S1:B,S2:A,V7=0V				2	mA	6a

ELECTRICAL CHARACTERISTICS (continued)

Parameter	Test Conditions	Min.	Typ.	Max.	Unit	Fig.
SOFT START						
I_{5so} Source current	$V_6 = 0V$, $V_5 = 3V$	100	130	160	µA	6b
$I_{5\,si}$ Sink current	$V_6 = 3V$, $V_5 = 3V$	50	70	120	µA	6b
INHIBIT						
V_{6L} Low input voltage	$V_i = 9V$ to $46V$ S1 : B S2 : B $V_7 = 0V$	-0.3		0.8	V	6a
V_{6H} High input voltage		2		5.5	V	6a
$-I_{6L}$ Input current with low input voltage	$V_i = 9V$ to $46V$ $V_7 = 0V$ S1 : B S2 : B $V_6 = 0.8V$			10	µA	6a
$-I_{6H}$ Input current with high input voltage	$V_6 = 2V$			3	µA	6a
ERROR AMPLIFIER						
V_{9H} High level output voltage	$V_{10} = 4.7V$, $I_9 = 100\mu A$, S1:A, S2:A	3.5			V	6c
V_{9L} Low level output volt.	$V_{10} = 5.3V$, $I_9 = 100\mu A$, S1:A, S2:E			0.5	V	6c
$I_{9\,si}$ Sink output current	$V_{10} = 5.3V$, S1 :A, S2 : B	100	150		µA	6c
$-I_{9\,so}$ Source output current	$V_{10} = 4.7V$, S1 : A, S2 : D	100	150		µA	6c
I_{10} Input bias current	$V_{10} = 5.2V$ S1 : B		2	10	µA	6c
G_v DC open loop Gain	$V_9 = 1V$ to $3V$, S1 : A, S2 : C	46	55		dB	6c
OSCILLATOR AND PWM COMPARATOR						
$-I_7$ Input bias current of PWM comparator	$V_7 = 0.5V$ to $3.5V$			5	µA	6a
$-I_{11}$ Oscillator source current	$V_{11} = 2V$, S1 : A S2 : B	5			mA	6a
RESET						
V_{12R} Rising threshold voltage	$V_i = 9V$ to $46V$, S1 : B S2 : B	V_{ref} -150mV	V_{ref} -100mV	V_{ref} -50mV	V	6d
V_{12F} Falling threshold voltage		4.75	V_{ref} -150mV	V_{ref} -100mV	V	6d
V_{13D} Delay threshold voltage	$V_{12} = 5.3V$, S1 : A S2 : B	4.3	4.5	4.7	V	6d
V_{13H} Delay threshold voltage hysteresis			100		mV	6d
V_{14S} Output saturation volt.	$I_{14} = 16mA$; $V_{12} = 4.7V$; S1, S2 : B			0.4	V	6d
I_{12} Input bias current	$V_{12} = 0V$ to V_{ref}, S1 : B, S2 : B		1	3	µA	6d
$-I_{13\,so}$ Delay source current	$V_{13} = 3V$ S1 : A S2 : B $V_{12} = 5.3V$	70	110	140	µA	6d
$I_{13\,si}$ Delay sink current	$V_{12} = 4.7V$	10			mA	6d
I_{14} Output leakage current	$V_i = 46V$, $V_{12} = 5.3V$, S1 :B, S2 :A			100	µA	6d

ELECTRICAL CHARACTERISTICS (continued)

Parameter		Test Condition	Min.	Typ.	Max.	Unit	Fig.
CROWBAR							
V_1	Input threshold voltage	S1 : B	5.5	6	6.4	V	6b
V_{15}	Output saturation voltage	V_i = 9V to 46V, V_1 = 5.4V I_{15} = 5mA, S1 : A		0.2	0.4	V	6b
I_1	Input bias current	V_1 = 6V, S1 : B			10	μA	6b
$-I_{15}$	Output source current	V_i = 9V to 46V, V_1 = 6.5V V_{15} = 2V, S1 : B	70	100		mA	6b

Fig. 4 - Dynamic test circuit

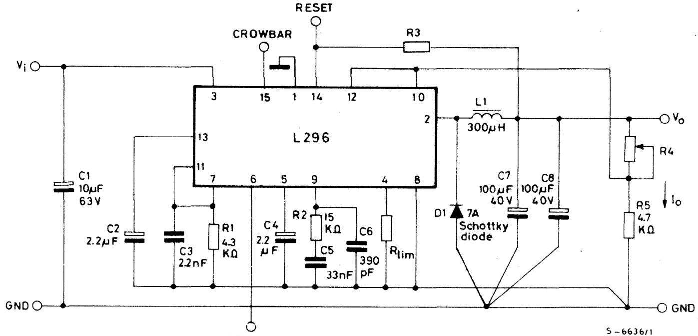

C7, C8 : EKR (ROE)
L1 : L= 300 μH at 8A
R = 50mΩ

Core type: MAGNETICS 58930 - A2 MPP
N° turns : 43   Wire Gauge : 1mm (18 AWG)

Fig. 5 - PC. board and component layout of the circuit of fig. 4 (1:1 scale)

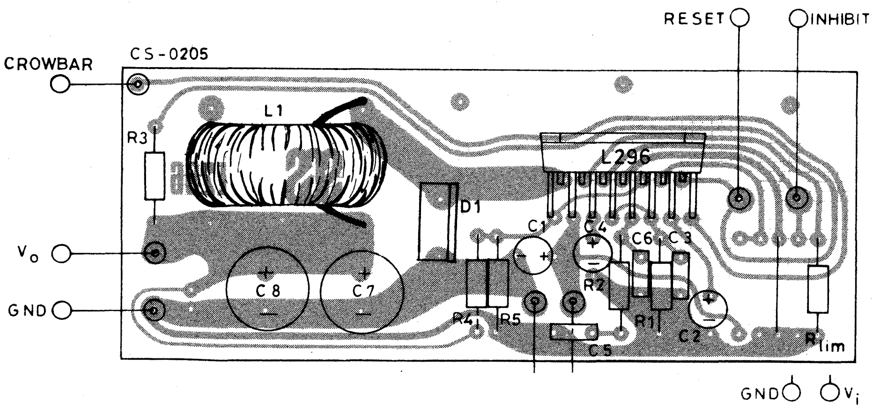

Fig. 6 - DC test circuits

Fig. 6a

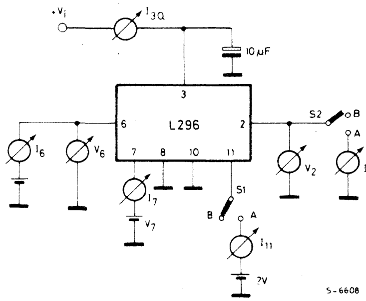

Fig. 6b

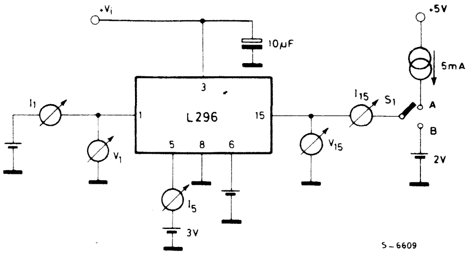

Fig. 6c

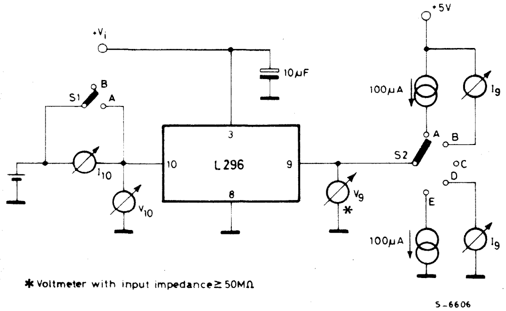

***** Voltmeter with input impedance ≥ 50MΩ

1 - Set V_{10} for $V_9 = 1V$

2 - Change V_{10} to obtain $V_9 = 3V$

3 - $G_v = \dfrac{\Delta V_9}{\Delta V_{10}} = \dfrac{2V}{\Delta V_{10}}$

Fig. 6d

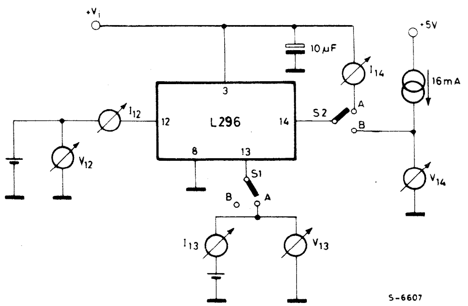

Fig. 7 - Quiescent drain current vs. supply voltage (0% duty cycle - see fig. 6a)

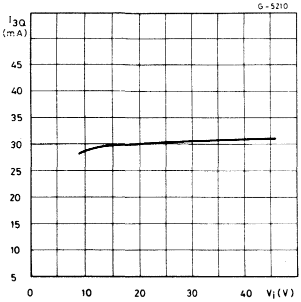

Fig. 8 - Quiescent drain current vs. supply voltage (100% duty cycle see fig. 6a)

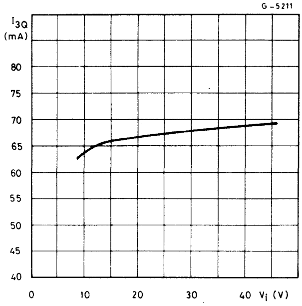

Fig. 9 - Quiescent drain current vs. junction temperature (0% duty cycle - see fig. 6a)

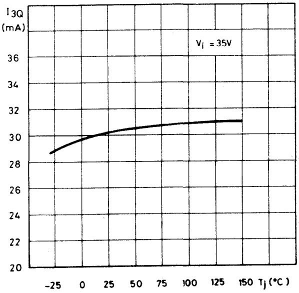

Fig. 10 - Quiescent drain current vs. junction temperature (100% duty cycle - see fig. 6a)

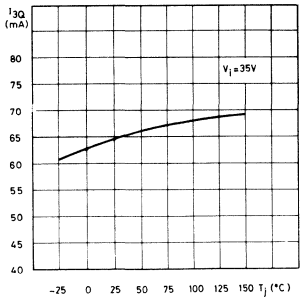

Fig. 11 - Reference voltage (pin 10) vs. V_i (see fig. 4)

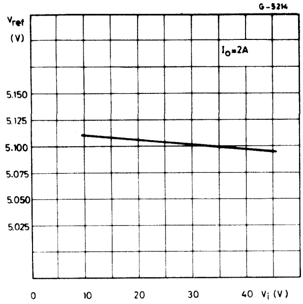

Fig. 12 - Reference voltage (pin 10) vs. junction temperature (see fig. 4)

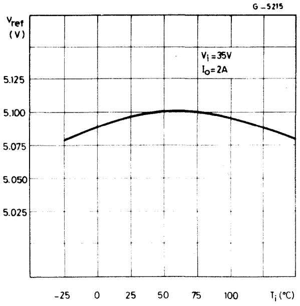

Fig. 13 - Open loop frequency and phase response of error amplifier (see fig. 6c)

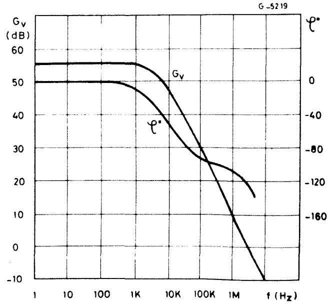

Fig. 14 - Switching frequency vs. input voltage (see fig. 4)

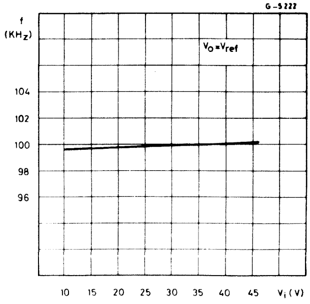

Fig. 15 - Switching frequency vs. junction temperature (see fig. 4)

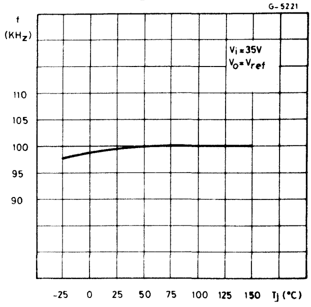

Fig. 16 - Switching frequency vs. R1 (see fig. 4)

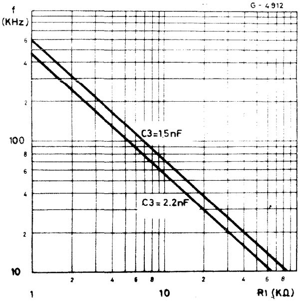

Fig. 17 - Line transient response (see fig. 4)

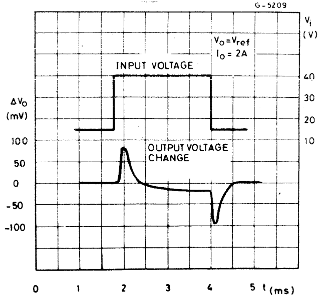

Fig. 18 - Load transient response (see fig. 4)

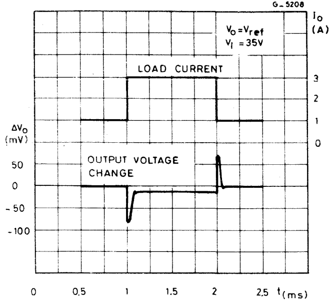

Fig. 19 - Supply voltage ripple rejection vs. frequency (see fig. 4)

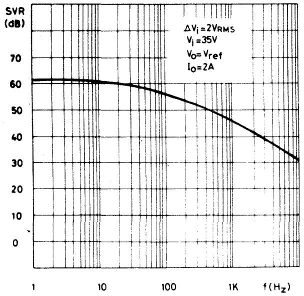

Fig. 20 - Dropout voltage between pin 3 and pin 2 vs. current at pin 2

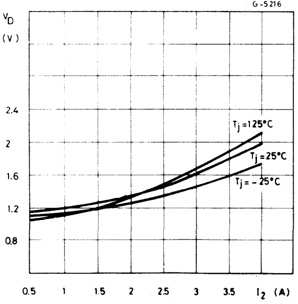

Fig. 21 - Dropout voltage between pin 3 and pin 2 vs. junction temperature

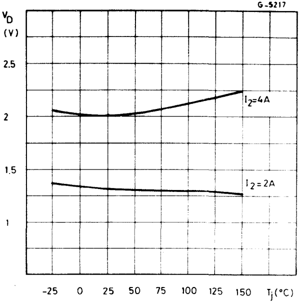

Fig. 22 - Power dissipation derating curve

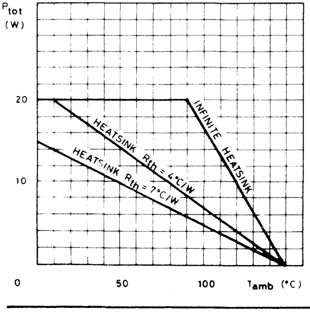

Fig. 23 - Power dissipation (L296 only) vs. input voltage

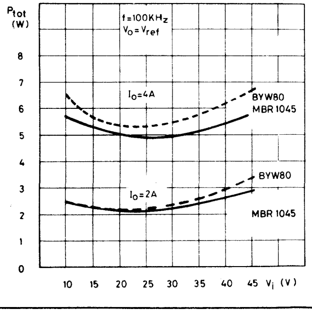

Fig. 24 - Power dissipation (L296 only) vs. input voltage

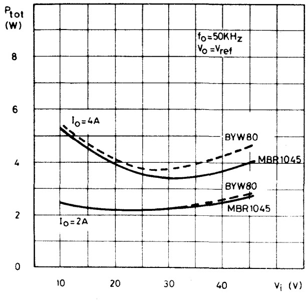

Fig. 25 - Power dissipation (L296 only) vs. output voltage (see fig. 4)

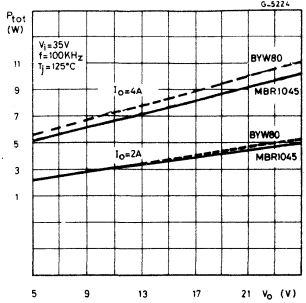

Fig. 26 - Power dissipation (L296 only) vs. output voltage (see fig. 4)

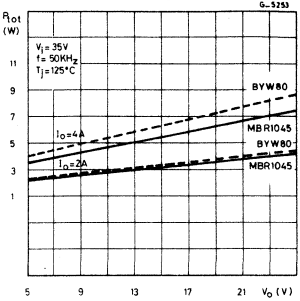

Fig. 27 - Voltage and current waveforms at pin 2 (see fig. 4)

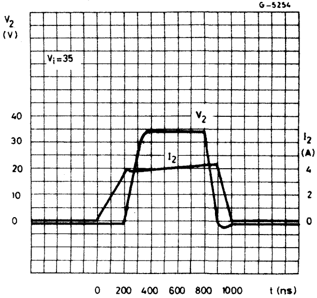

Fig. 28 - Efficiency vs. output current

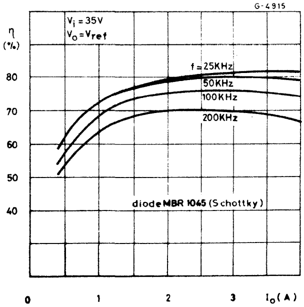

Fig. 29 - Efficiency vs. output current

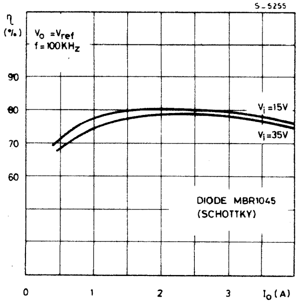

Fig. 30 - Efficiency vs. output voltage

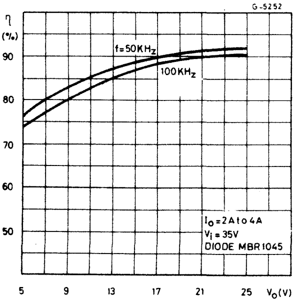

APPLICATION INFORMATION

CHOOSING THE INDUCTOR AND CAPACITOR

The input and output capacitors of the L296 must have a low ESR and low inductance at high current ripple.

Preferably, the inductor should be a toroidal type or wound on a Moly-Permalloy nucleus. Saturation must not occur at current levels below 1.5 times the current limiter level. MPP nuclei have very soft saturation characteristics.

$$L = \frac{(V_i - V_o)\,V_o}{V_i\, f\, \Delta I_L}$$

$$C = \frac{(V_i - V_o)\,V_o}{8L\, f^2\, \Delta V_o}$$

f = frequency

ΔI_L = Inductance current ripple

ΔV_O = Output ripple voltage

APPLICATION INFORMATION

Fig. 31 - Typical application circuit

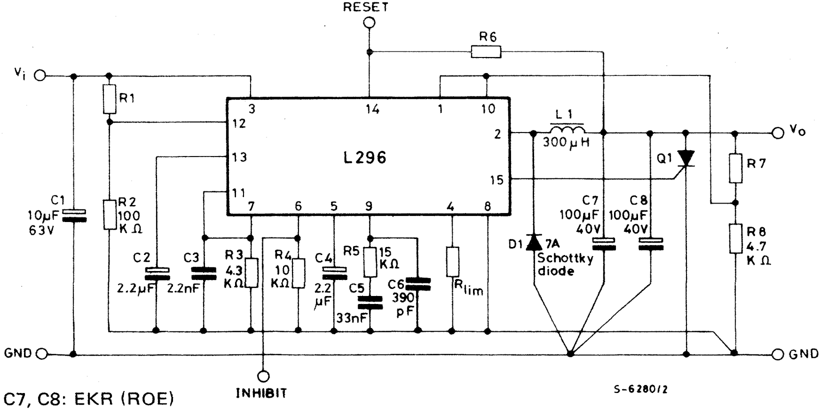

C7, C8: EKR (ROE)

SUGGESTED INDUCTOR (L1)

Core Type	No Turns	Wire Gauge	Air Gap
Magnetics 58930 - A2MPP	43	1.0 mm.	—
Thomson GUP 20x16x7	50	0.8 mm.	0.7 mm.
Siemens EC 35/17/10 (B6633& - G0500 - X127)	40	2 x 0.8 mm.	—
VOGT 250 µH Toroidal coil, part number 5730501800			

Resistor values for standard output voltages		
V_o	R8	R7
12V	4.7 kΩ	6.2 kΩ
15V	4.7 kΩ	9.1 kΩ
18V	4.7 kΩ	12 kΩ
24V	4.7 kΩ	18 kΩ

Fig. 32 - P.C. board and component layout of the circuit of fig. 31 (1 : 1 scale)

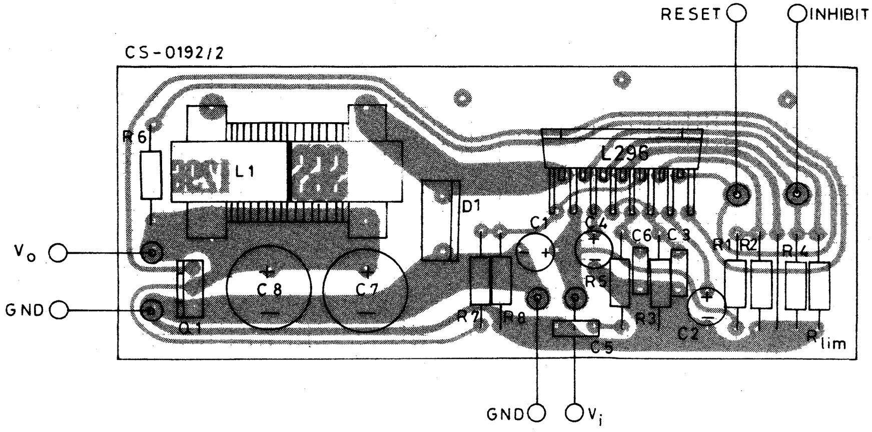

SELECTION OF COMPONENT VALUES (See fig. 31)

Component	Recommended Value	Purpose	Allowed rage Min	Allowed rage Max	NOTES
R1 R2	— 100 kΩ	Set input voltage threshold for reset.	—	220 kΩ	$R1/R2 = \frac{V_{i\,min}}{5} - 1$ If output voltage is sensed R1 and R2 may be limited and pin 12 connected to pin 10.
R3	4.3 kΩ	Sets switching frequency	1 kΩ	100 kΩ	
R4	10 kΩ	Pull-down resistor		22 kΩ	May be omitted and pin 6 grounded if inhibit not used.
R5	15 kΩ	Frequency compensation	10 kΩ		
R6		Collector load for reset output	$\frac{V_o}{0.05A}$		Omitted if reset function not used.
R7 R8	— 4.7 kΩ	Divider to set output voltage	— —	— 10 kΩ	$R7/R8 = \frac{V_o - V_{ref}}{V_{ref}}$
R_{lim}	—	Sets current limit level			If R_{lim} is omitted and pin 4 left open the current limit is internally fixed.
C1	10 µF	Stability	1 µF		
C2	2.2 µF	Sets reset delay	—	—	Omitted if reset function not used.
C3	2.2 nF	Sets switching frequency	1 nF	3.3 nF	
C4	2.2 µF	Soft start	1 µF	—	Also determines average short circuit current.
C5	33 nF	Frequency compensation			
C6	390 pF	High frequency compensation	—	—	Not required for 5V operation
C7,C8 L1	100 µF 300 µH	Output filter			
Q1		Crowbar protection			The SCR must be able to withstand the peak discharge current of the output capacitor and the short circuit current of the device.
D1		Recirculation diode			7A schottky or high efficiency diode in D0220 package

APPLICATION INFORMATION (continued)

Fig. 33 - A minimal 5.1V fixed regulator. Very few components are required.

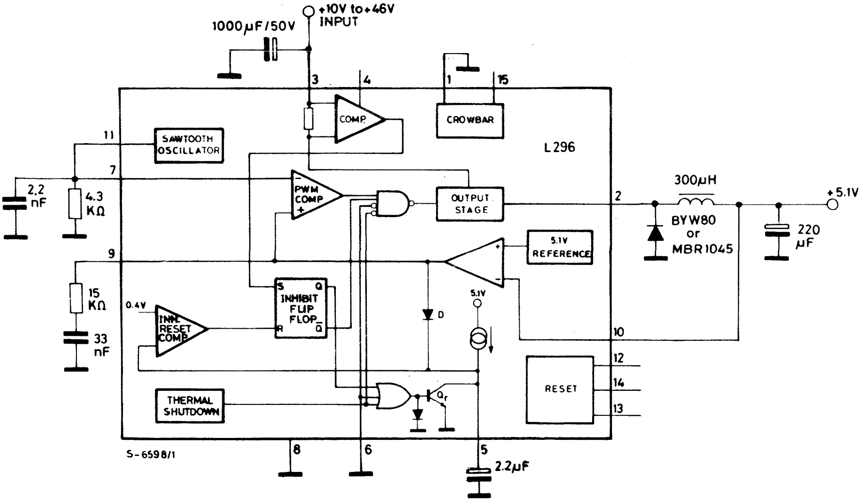

Fig. 34 - 12V/10A Power supply

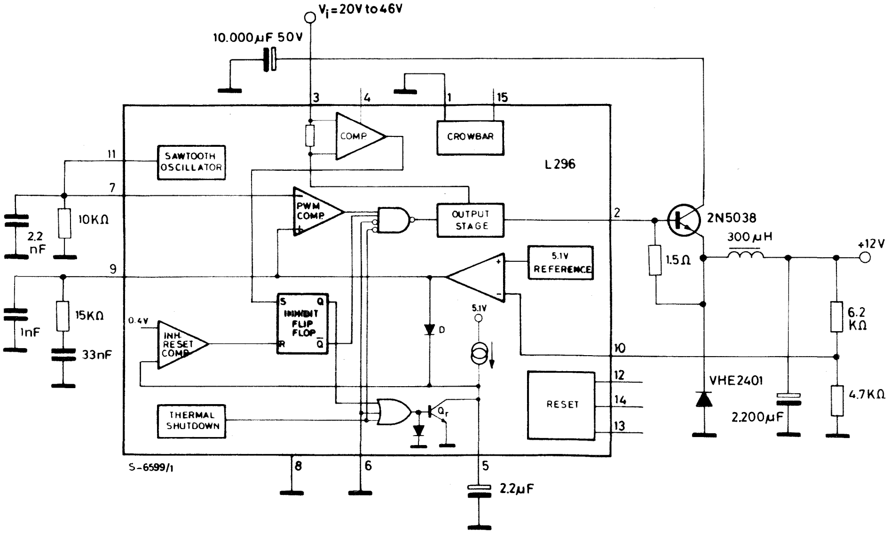

APPLICATION INFORMATION (continued)

Fig. 35 – Programmable power supply

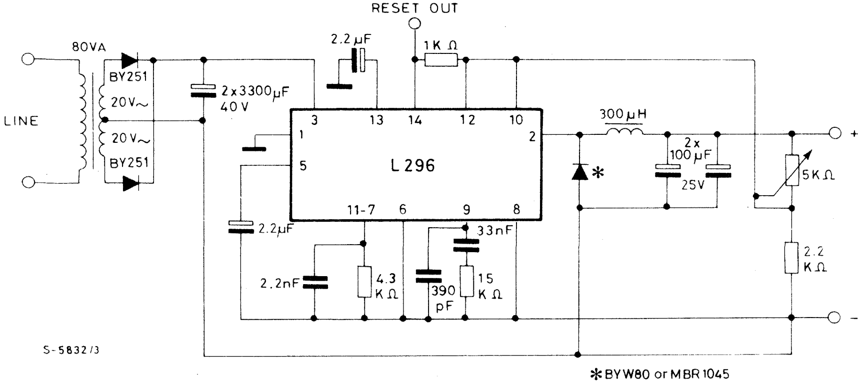

$V_o = 5.1$ to $15V$
$I_o = 4A$ max. (min. load current = 100 mA)
ripple $\leqslant 20$ mV
load regulation (1A to 4A) = 10 mV ($V_o = 5.1V$)
line regulation (220V ± 15% and to $I_o = 3A$) = 15 mV ($V_o = 5.1V$)

Fig. 36 – Preregulator for distributed supplies.

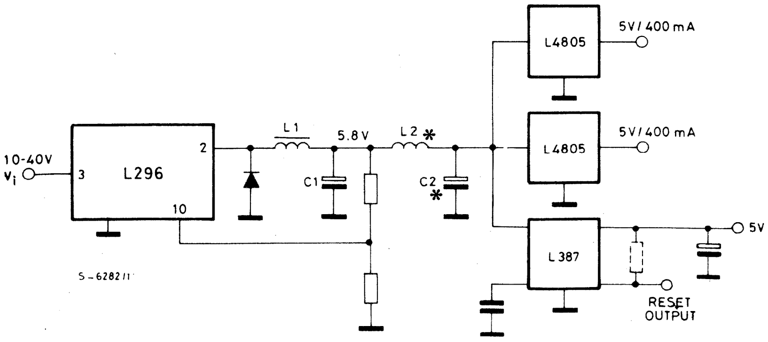

(*) L2 and C2 are necessary to reduce the switching frequency spikes.

APPLICATION INFORMATION (continued)

Fig. 37 – In multiple supplies several L296s can be synchronized as shown.

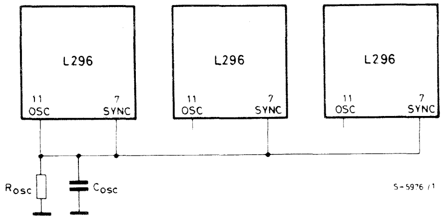

Fig. 38 – Voltage sensing for remote load

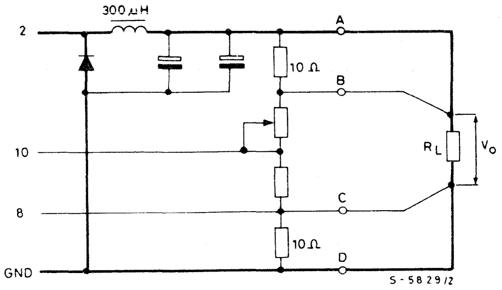

Fig. 39 - A 5.1V/15V/24V multiple supply. Note the synchronization of the three L296s.

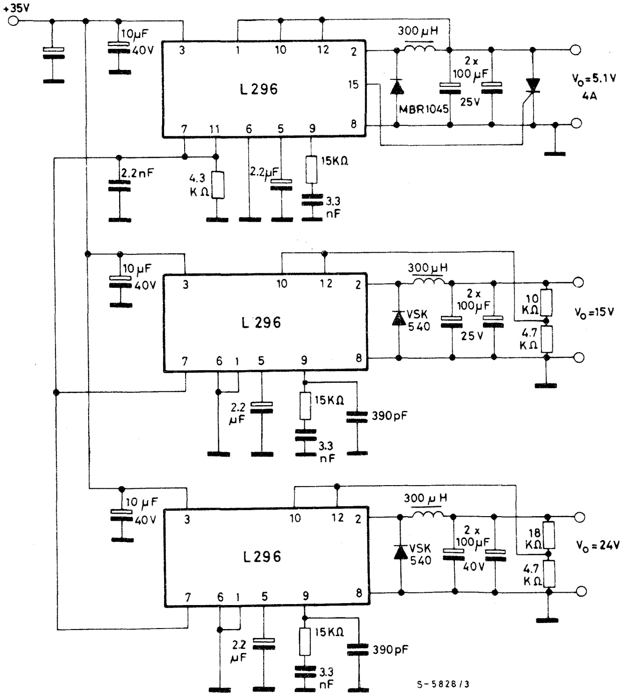

MOUNTING INSTRUCTIONS

The power dissipated in the circuit must be removed by adding an external heatsink.

Thanks to the Multiwatt® package attaching the heatsink is very simple, a screw or a compression spring (clip) being sufficient. Between the heatsink and the package it is better to insert a layer of silicon grease, to optimize the thermal contact; no electrical isolation is needed between the two surfaces.

Fig. 40 - Mounting example

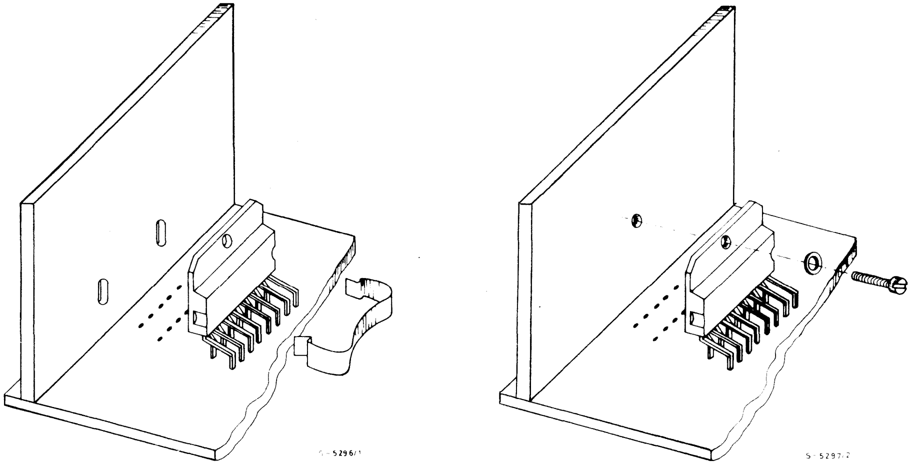

MECHANICAL DATA (Dimensions in mm)

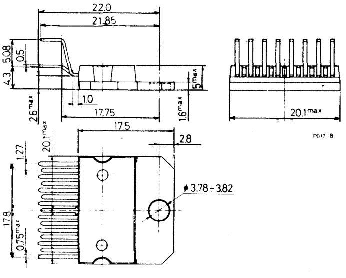

LINEAR INTEGRATED CIRCUITS

L297
L297A

ADVANCE DATA

STEPPER MOTOR CONTROLLERS

- NORMAL/WAVE DRIVE
- HALF/FULL STEP MODES
- CLOCKWISE/ANTICLOCKWISE DIRECTION
- SWITCHMODE LOAD CURRENT REGULATION
- PROGRAMMABLE LOAD CURRENT
- FEW EXTERNAL COMPONENTS
- RESET INPUT & HOME OUTPUT
- ENABLE INPUT
- STEP PULSE DOUBLER (L297A ONLY)

The L297 Stepper Motor Controller IC generates four phase drive signals for two phase bipolar and four phase unipolar step motors in microcomputer-controlled applications. The motor can be driven in half step, normal and wave drive modes and on-chip PWM chopper circuits permit switchmode control of the current in the windings. A feature of this device is that it requires only clock, direction and mode input signals. Since the phases are generated internally the burden on the microprocessor, and the programmer, is greatly reduced. Mounted in a 20-pin plastic package, the L297 can be used with monolithic bridge drivers such as the L298 or L293E, or with discrete transistors and darlingtons. The L297A also includes a clock pulse doubler.

ABSOLUTE MAXIMUM RATINGS

V_s	Supply voltage	10	V
V_i	Input signals	7	V
P_{tot}	Total power dissipation (T_{amb} = 70°C)	1	W
T_{stg}, T_j	Storage and junction temperature	-40 to +150	°C

ORDERING NUMBERS: L297
L297A

MECHANICAL DATA

Dimensions in mm

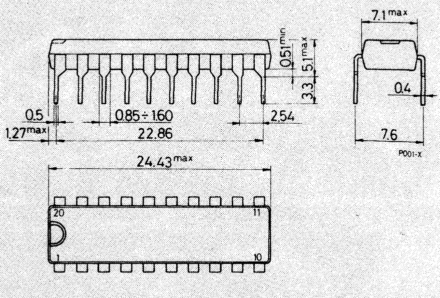

CONNECTION DIAGRAM

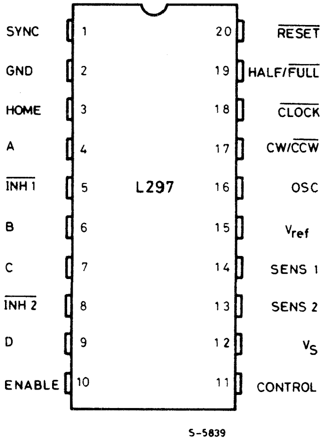

BLOCK DIAGRAM

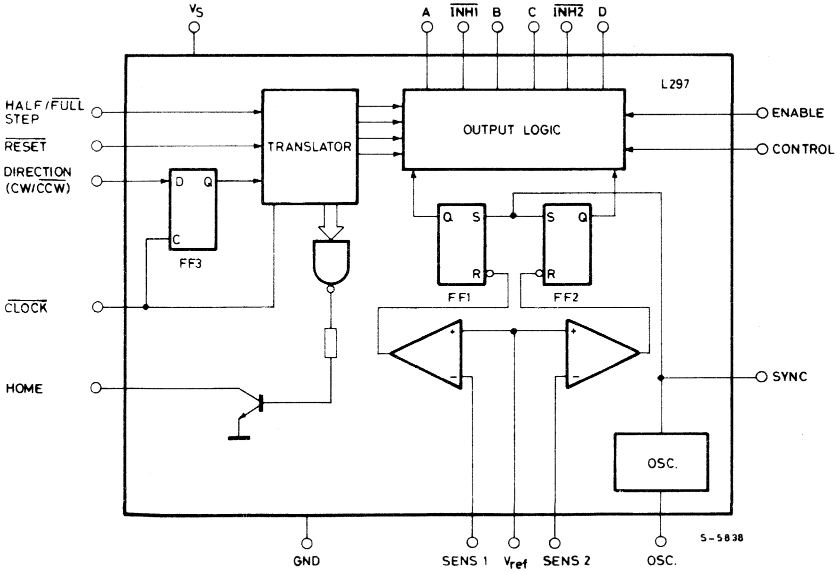

CONNECTION DIAGRAM

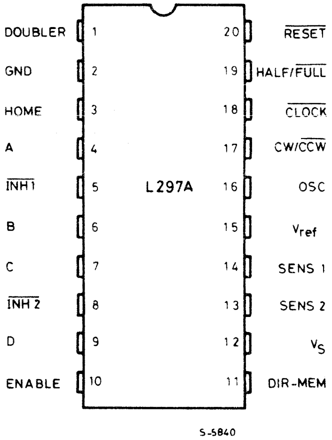

BLOCK DIAGRAM

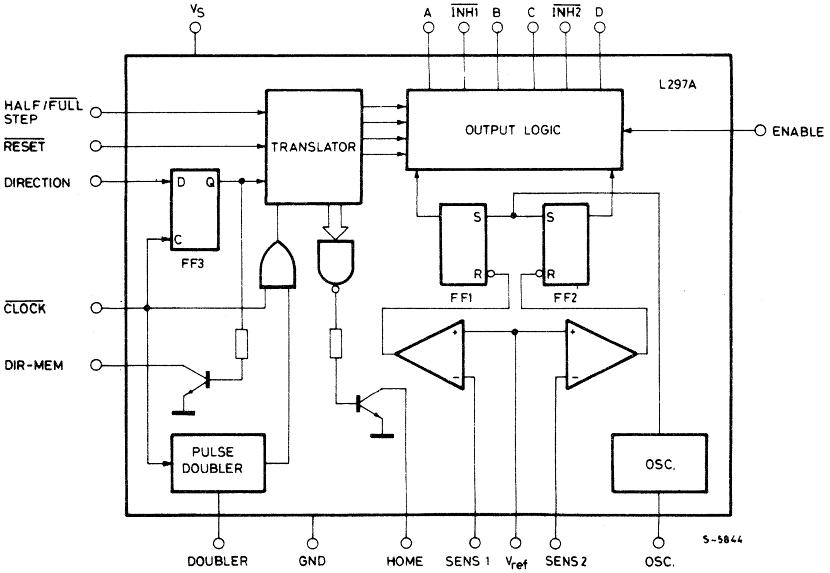

THERMAL DATA

$R_{th\ j\text{-}amb}$	Thermal resistance junction-ambient	max.	80	°C/W

PIN FUNCTIONS – L297

N°	NAME	FUNCTION
1	SYNC	Output of the on-chip chopper oscillator. The SYNC connections of all L297s to be synchronized are connected together and the oscillator components are omitted on all but one. If an external clock source is used it is injected at this terminal.
2	GND	Ground connection.
3	HOME	Open collector output that indicates when the L297 is in its initial state (ABCD = 0101). The transistor is open when this signal is active.
4	A	Motor phase A drive signal for power stage.
5	$\overline{\text{INH1}}$	Active low inhibit control for driver stages of A and B phases. When a bipolar bridge is used this signal can be used to ensure fast decay of load current when a winding is de-energized. Also used by chopper to regulate load current if CONTROL input is low.
6	B	Motor phase B drive signal for power stage.
7	C	Motor phase C drive signal for power stage.
8	$\overline{\text{INH2}}$	Active low inhibit control for drive stages of C and D phases. Same functions as $\overline{\text{INH1}}$.
9	D	Motor phase D drive signal for power stage.
10	ENABLE	Chip enable input. When low (inactive) $\overline{\text{INH1}}$, $\overline{\text{INH2}}$, A, B, C and D are brought low.
11	CONTROL	Control input that defines action of chopper. When low chopper acts on $\overline{\text{INH1}}$ and $\overline{\text{INH2}}$; when high chopper acts on phase lines ABCD.
12	V_s	5V supply input.
13	SENS_2	Input for load current sense voltage from power stages of phases C and D.

PIN FUNCTIONS – L297 (continued)

N°	NAME	FUNCTION
14	$SENS_1$	Input for load current sense voltage from power stages of phases A and B.
15	V_{ref}	Reference voltage for chopper circuit. A voltage applied to this pin determines the peak load current.
16	OSC	An RC network (R to V_{CC}, C to ground) connected to this terminal determines the chopper rate. This terminal is connected to ground on all but one device in synchronized multi - L297 configurations. $f \cong 1/0.69\ RC$, $R > 10\ k\Omega$.
17	$CW/\overline{CCW}$	Clockwise/counterclockwise direction control input. Physical direction of motor rotation also depends on connection of windings. Synchronized internally therefore direction can be changed at any time.
18	$\overline{CLOCK}$	Step clock. An active low pulse on this input advances the motor one increment. The step occurs on the rising edge of this signal.
19	$HALF/\overline{FULL}$	Half/full step select input. When high selects half step operation; when low selects full step operation. One-phase-on full step mode is obtained by selecting FULL when the L297's translator is at an even-numbered state. Two-phase-on full step mode is set by selecting FULL when the translator is at an odd numbered position. (The home position is designated state 1).
20	$\overline{RESET}$	Reset input. An active low pulse on this input restores the translator to the home position (state 1, ABCD = 0101).

PIN FUNCTIONS - L297A

Pin function of the L297A are identical to those of the L297 except for pins 1 and 11.

N°	NAME	FUNCTIONS
1	DOUBLER	An RC network connected to this pin determines the delay between an input clock pulse and the corresponding ghost pulse.
11	DIR-MEM	Direction Memory. Inverted output of the direction flip flop. Open collector output.

CIRCUIT OPERATION

The L297(A) is intended for use with a dual bridge driver, quad darlington array or discrete power devices in step motor driving applications. It receives step clock, direction and mode signals from the systems controller (usually a microcomputer chip) and generates control signals for the power stage.

The principal functions are a translator, which generates the motor phase sequences, and a dual PWM chopper circuit which regulates the current in the motor windings. The translator generates three different sequences, selected by the HALF/$\overline{\text{FULL}}$ input. These are normal (two phases energised), wave drive (one phase energised) and half-step (alternately one phase energised/two phases energised). Two inhibit signals are also generated by the L297 in half step and wave drive modes. These signals, which connect directly to the L298's enable inputs, are intended to speed current decay when a winding is de-energised. When the L297 is used to drive a unipolar motor the chopper acts on these lines.

An input called CONTROL determines whether the chopper will act on the phase lines ABCD or the inhibit lines $\overline{\text{INH1}}$ and $\overline{\text{INH2}}$. When the phase lines are chopped the non-active phase line of each pair (AB or CD) is activated (rather than interrupting the line then active). In L297 + L298 configurations this technique reduces dissipation in the load current sense resistors.

A common on-chip oscillator drives the dual chopper. It supplies pulses at the chopper rate which set the two flip-flops FF1 and FF2. When the current in a winding reaches the programmed peak value the voltage across the sense resistor (connected to one of the sense inputs SENS_1 or SENS_2) equals V_{ref} and the corresponding comparator resets its flip flop, interrupting the drive current until the next oscillator pulse arrives. The peak current for both windings is programmed by a voltage divider on the V_{ref} input.

Ground noise problems in multiple configurations can be avoided by synchronising the chopper oscillators. This is done by connecting all the SYNC pins together, mounting the oscillator RC network on one device only and grounding the OSC pin on all other devices.

The L297A includes a pulse doubler on the step clock line which is intended to simplify the implementation of multiple stepping. A ghost pulse is generated automatically after each input pulse, delayed by the time $0.75\ R_d\ C_d$.

The RC network should be dimensioned to place the ghost pulse roughly halfway between clock pulses. If pin 1 (DOUBLER) is grounded the doubler function is disabled.

MOTOR DRIVING PHASE SEQUENCES

The L297's translator generates phase sequences for normal drive, wave drive and half step modes. The state sequences and output waveforms for these three modes are shown below. In all cases the translator advances on the low to high transistion of $\overline{\text{CLOCK}}$.
Clockwise rotation is indicated; for anticlockwise rotation the sequences are simply reversed. $\overline{\text{RESET}}$ restores the translator to state 1, where ABCD = 0101.

Half step mode

Half step mode is selected by a high level on the HALF/$\overline{\text{FULL}}$ input.

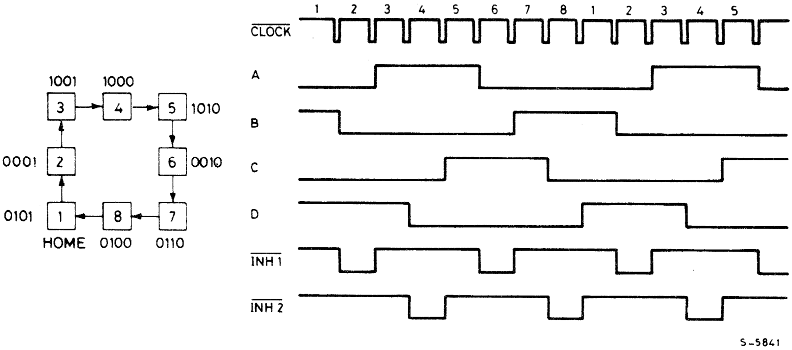

Normal drive mode

Normal drive mode (also called "two-phase-on" drive) is selected by a low level on the HALF/$\overline{\text{FULL}}$ input when the translator is at an odd numbered state (1, 3, 5 or 7). In this mode the $\overline{\text{INH1}}$ and $\overline{\text{INH2}}$ outputs remain high throughout.

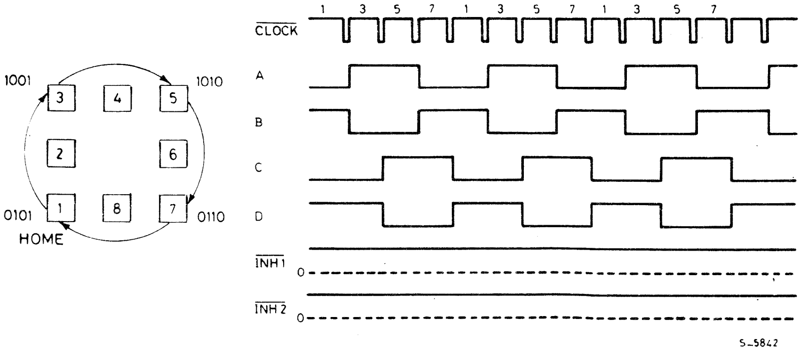

MOTOR DRIVING PHASE SEQUENCES (continued)

Wave drive mode

Wave drive mode (also called "one-phase-on" drive) is selected by a low level on the HALF/$\overline{\text{FULL}}$ input when the translator is at an even numbered state (2, 4, 6 or 8).

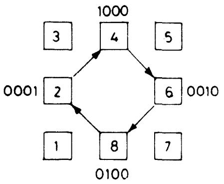

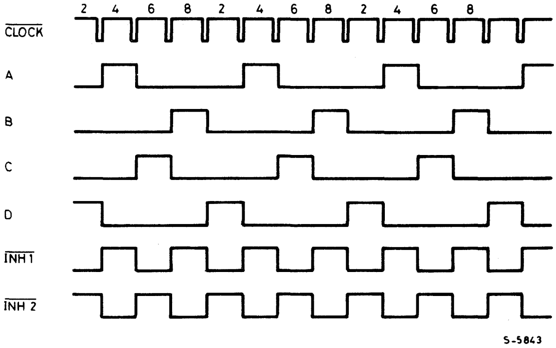

ELECTRICAL CHARACTERISTICS (Refer to the block diagram $T_{amb} = 25°C$, $V_s = 5V$ unless otherwise specified)

Parameter		Test conditions	Min.	Typ.	Max.	Unit
V_s	Supply voltage (pin 12)		4.75		7	V
I_s	Quiescent supply current (pin 12)	Outputs floating		50		mA
V_i	Input voltage (pins 11, 17, 18, 19, 20)	Low			0.8	V
		High	2		V_s	V
I_i	Input current (pin 11, 17, 18, 19, 20)	$V_i = L$			-100	µA
		$V_i = H$			10	µA
V_{en}	Enable input voltage (pin 10)	Low			1.5	V
		High	2		V_s.	V
I_{en}	Enable input current (pin 10)	$V_{en} = L$			-100	µA
		$V_{en} = H$			10	µA

ELECTRICAL CHARACTERISTICS (continued)

Parameter		Test conditions		Min.	Typ.	Max.	Unit
V_o	Phase output voltage (pins 4, 6, 7, 9)	I_o = 15 mA	V_{OL}			0.4	V
			V_{OH}	3.9			V
V_{inh}	Inhibit output voltage (pins 5, 8)	I_{inh} = 15 mA	$V_{inh\ L}$			0.4	V
			$V_{inh\ H}$	3.9			V
I_{leak}	Leakage current (pins 3, 11 *)	V_{CE}= 7V				1	µA
V_{sat}	Saturation voltage (pins 3, 11 *)	I = 5 mA				0.4	V
V_{off}	Comparators offset voltage (pins 13, 14, 15)	V_{ref} = 1V				5	mV
I_b	Comparator bias current (pins 13, 14, 15)			-100		10	µA
V_{ref}	Input reference voltage (pin 15)			0		3	V
t_{CLK}	Clock time			0.5			µs
t_S	Set up time			1			µs
t_H	Hold time			1			µs
t_R	Reset time			1			µs
t_{RCLK}	Reset to clock delay			1			µs

* L297A only.

Fig. 1

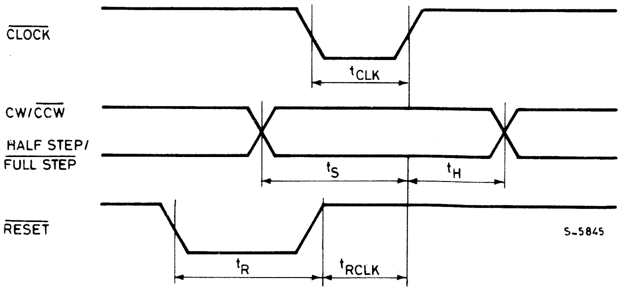

APPLICATION INFORMATION

Two phase bipolar stepper motor control circuit

This circuit drives bipolar stepper motors with winding currents up to 2A. The diodes are fast 2A types.

Fig. 2

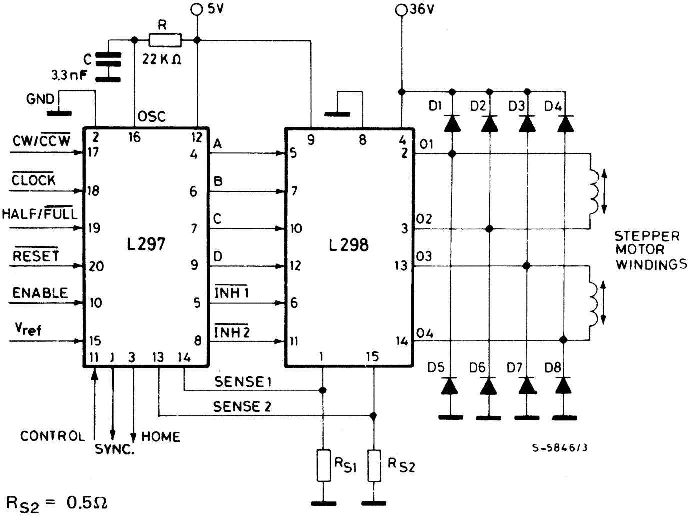

R_{S1} R_{S2} = 0.5Ω

D1 to D8 = 2A Fast diodes $\begin{cases} V_F \leqslant 1.2V \text{ @ } I = 2A \\ trr \leqslant 200 \text{ ns} \end{cases}$

Fig. 3 - Synchronising L297s

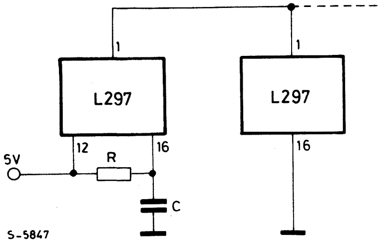

$$f \cong \frac{1}{0.69\ RC}$$

Fig. 4 - Pulse doubler (L297A)

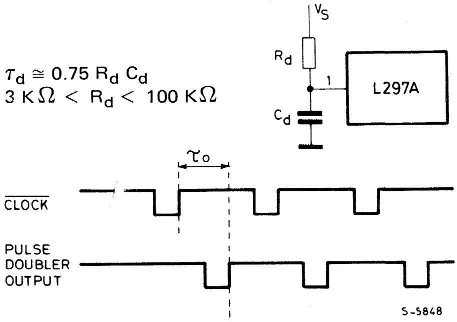

$\mathcal{T}_d \cong 0.75\ R_d\ C_d$
$3\ K\Omega < R_d < 100\ K\Omega$

LINEAR INTEGRATED CIRCUITS

SGS **L298**

ADVANCE DATA

DUAL FULL-BRIDGE DRIVER

- POWER SUPPLY VOLTAGE UP TO 46V
- TOTAL DC CURRENT UP TO 4A
- LOW SATURATION VOLTAGE
- OVERTEMPERATURE PROTECTION
- LOGICAL "0" INPUT VOLTAGE UP TO 1.5V (HIGH NOISE IMMUNITY)

The L298 is an integrated monolithic circuit in a 15-lead Multiwatt® package. It is a high voltage, high current dual full-bridge driver designed to accept standard TTL logic levels and drive inductive loads such as relays, solenoids, DC and stepping motors. Two inhibit inputs are provided to disable the device independently of the input signals. The emitters of the lower transistors of each bridge are connected together and the corresponding external terminal can be used for the connection of an external sensing resistor. An additional supply input is provided so that the logic works at a lower voltage.

ABSOLUTE MAXIMUM RATINGS

V_s	Power supply	50	V
V_{ss}	Logic supply voltage	7	V
V_i, V_{inh}	Input and inhibit voltage	-0.3 to 7	V
I_o	Peak output current (each channel)		
	– non repetitive (t = 100 μs)	3	A
	– repetitive (80% on - 20% off; t_{on} = 10 ms)	2.5	A
	– DC operation	2	A
V_{sens}	Sensing voltage	-1 to 2.3	V
P_{tot}	Total power dissipation (T_{case} = 75°C)	25	W
T_{stg}, T_j	Storage and junction temperature	-40 to 150	°C

ORDERING NUMBER: L298

MECHANICAL DATA

Dimensions in mm

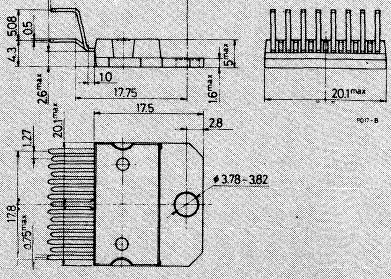

→ *Supersedes issue dated 3/83*

1/84

CONNECTION DIAGRAM
(top view)

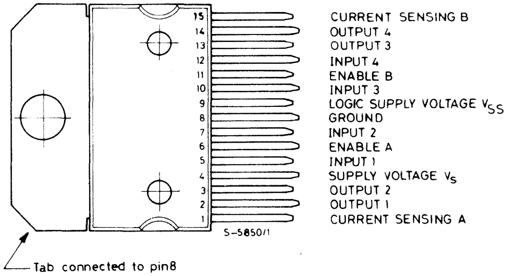

BLOCK DIAGRAM

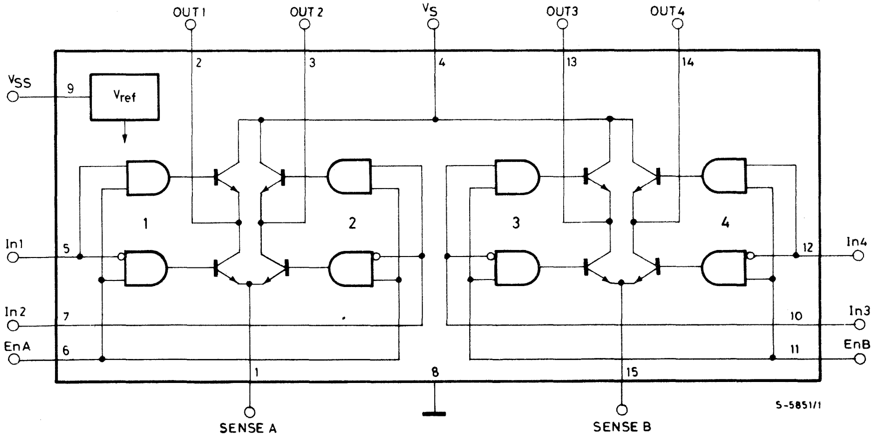

THERMAL DATA

$R_{th\ j\text{-}case}$	Thermal resistance junction-case	max.	3	°C/W
$R_{th\ j\text{-}amb}$	Thermal resistance junction-ambient	max.	35	°C/W

Fig. 1 - Switching times test circuits

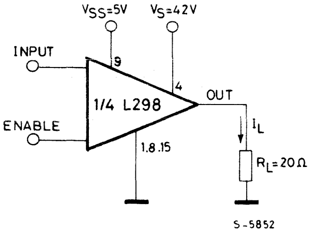

Note: For INPUT chopper, set EN = H

Fig. 1a - Source Current Delay Times vs. Input or Enable Chopper.

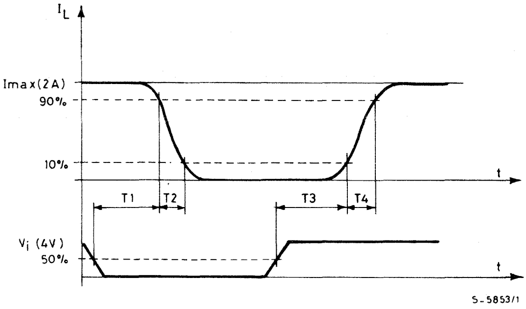

Fig. 2 - Switching times test circuits

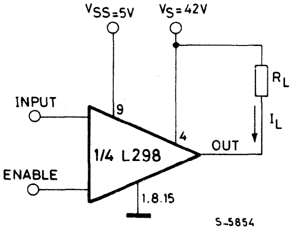

Note: For INPUT chopper, set EN = H

Fig. 2a - Sink Current Delay Times vs. Input or Enable Chopper.

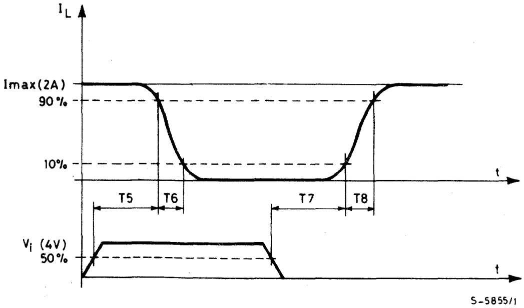

ELECTRICAL CHARACTERISTICS (for each channel, $V_s = 42V$, $V_{ss} = 5V$, $T_j = 25°C$)

Parameter		Test conditions		Min.	Typ.	Max.	Unit
→ V_s	Supply voltage (pin 4)	Operative condition		V_{IH}+2.5		46	V
V_{ss}	Logic supply voltage (pin 9)			4.5		7	V
→ I_s	Quiescent supply current (pin 4)	V_{inh}= H I_L = 0	V_i = L		3	7	mA
			V_i = H		15	20	
		V_{inh} = L				1	
→ I_{ss}	Quiescent current from V_{ss} (pin 9)	V_{inh}= H I_L = 0	V_i = L		5	10	mA
→			V_i = H		1.5	3	
		V_{inh}= L			1	1.5	
$V_{i\ L}$	Input low voltage (pins 5, 7, 10, 12)			-0.3		1.5	V
$V_{i\ H}$	Input high voltage (pins 5, 7, 10, 12)			2.3		V_{ss}	
$I_{i\ L}$	Low voltage input current (pins 5, 7, 10, 12)	V_i = L				-10	μA
$I_{i\ H}$	High voltage input current (pins 5, 7, 10, 12)	V_i = H			30	100	
$V_{inh\ L}$	Inhibit low voltage (pins 6, 11)			-0.3		1.5	V
$V_{inh\ H}$	Inhibit high voltage (pins 6, 11)			2.3		7	
$I_{inh\ L}$	Low voltage inhibit current (pins 6, 11)	V_{inh} = L				-10	μA
$I_{inh\ H}$	High voltage inhibit current (pins 6, 11)	$V_{inh} = H \leqslant V_{ss} - 0.6V$			30	100	
→ $V_{CE\ sat(H)}$	Source saturation voltage	I_L = 1A			1.2	1.8	V
→		I_L = 2A			1.8	2.8	
→ $V_{CE\ sat(L)}$	Sink saturation voltage	I_L = 1A			1.2	1.8	V
→		I_L = 2A			1.7	2.6	
→ $V_{CE\ sat}$	Total drop	I_L = 1A				3.4	V
→		I_L = 2A				5.2	
V_{sens}	Sensing voltage (pins 1, 15)			-1(1)		2	V
T_1 (V_i)	Source current turn off delay	0.5 V_i to 0.9 I_L (2)			1.7		μs
T_2 (V_i)	Source current fall time	0.9 I_L to 0.1 I_L (2)			0.2		μs
T_3 (V_i)	Source current turn-on delay	0.5 V_i to 0.1 I_L (2)			2.5		μs

ELECTRICAL CHARACTERISTICS (continued)

Parameter		Test conditions	Min.	Typ.	Max	Unit
T_4 (V_i)	Source current rise time	$0.1\ I_L$ to $0.9\ I_L$ (2)		0.35		μs
T_5 (V_i)	Sink current turn-off delay	$0.5\ V_i$ to $0.9\ I_L$ (3)		0.7		μs
T_6 (V_i)	Sink current fall time	$0.9\ I_L$ to $0.1\ I_L$ (3)		0.2		μs
T_7 (V_i)	Sink current turn-on delay	$0.5\ V_i$ to $0.1\ I_L$ (3)		1.5		μs
T_8 (V_i)	Sink current rise time	$0.1\ I_L$ to $0.9\ I_L$ (3)		0.2		μs
f_c	Commutation frequency	$I_L = 2A$		25	40	KHz

1) Sensing voltage can be $-1V$ for $t \leq 50\ \mu sec$; in steady state V_{sens} min $\geq -0.5V$.
2) See fig. 1a.
3) See fig. 2a.

Fig. 4 - Bidirectional DC motor control

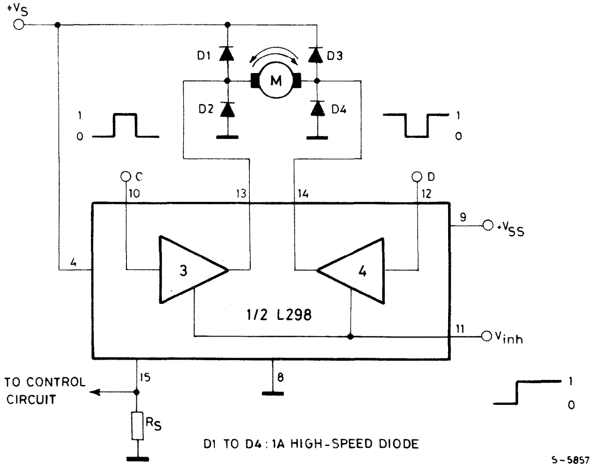

INPUTS		FUNCTION
V_{inh} = H	C = H; D = L	Turn right
	C = L; D = H	Turn left
	C = D	Fast motor stop
V_{inh} = L	C = X; D = C	Free running motor stop

L = Low H = High X = Don't care

Fig. 5 - Two phase bipolar stepper motor control circuit

This circuit drives bipolar stepper motors with winding currents up to 2A.

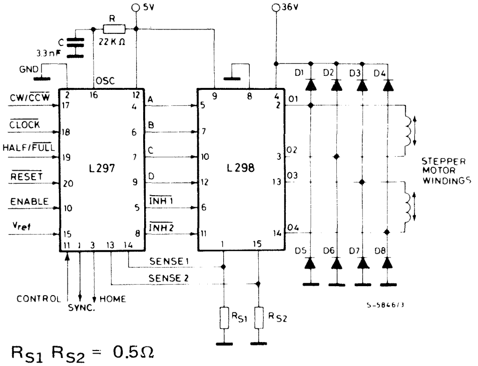

R_{S1} R_{S2} = 0.5Ω

D1 to D8 = 2A Fast diodes { $V_F \leqslant 1.2V$ @ I = 2A; trr ⩽ 200 ns

Fig. 6 - Suggested printed circuit board layout for the circuit of fig. 5 (1:1 scale)

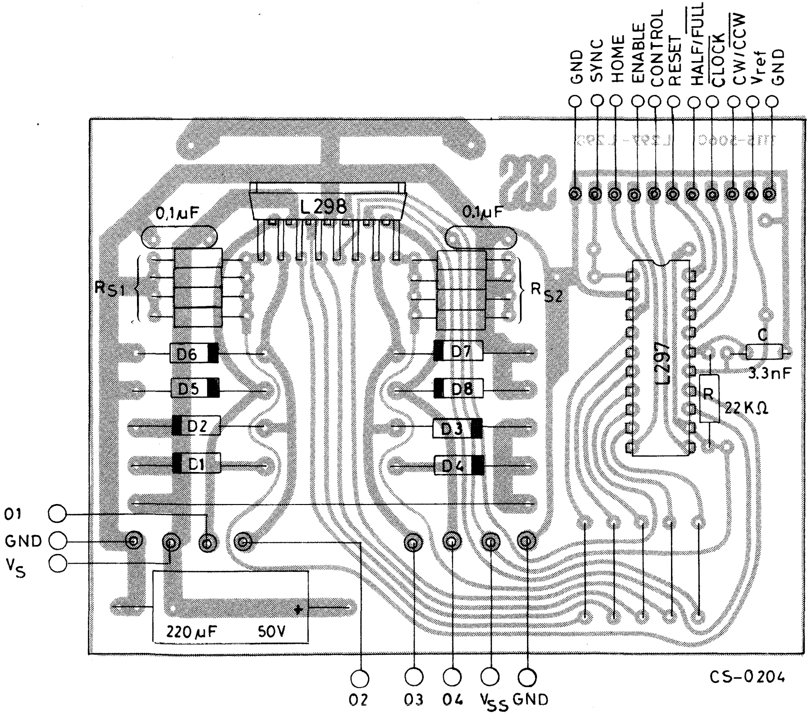

LINEAR INTEGRATED CIRCUITS

L387

ADVANCE DATA

VERY LOW DROP 5V VOLTAGE REGULATOR

- PRECISE OUTPUT VOLTAGE (5V ± 4%)
- VERY LOW DROPOUT VOLTAGE
- OUTPUT CURRENT IN EXCESS OF 500 mA
- POWER-ON, POWER-OFF INFORMATION (RESET FUNCTION)

The L387 is a very low drop voltage regulator in a Pentawatt® package specially designed to provide stabilized 5V supplies in consumer and industrial applications. Thanks to its very low input/output voltage drop this device is very useful in battery powered equipment, reducing consumption and prolonging battery life. A reset output makes the L387 particularly suitable for microprocessor systems. This output provides a reset pulse when power is applied (after an externally programmable delay) and goes low when power is removed, inhibiting the microprocessor.

ABSOLUTE MAXIMUM RATINGS

V_i	Forward input voltage	28	V
T_{op}	Operating junction temperature	-40 to 150	°C
T_{stg}	Storage temperature	-55 to 150	°C

ORDERING NUMBER: L387

MECHANICAL DATA

Dimensions in mm

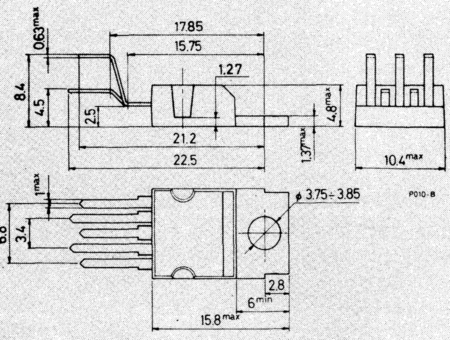

→ *Supersedes issue dated 8/83*

1/84

CONNECTION DIAGRAM

(top view)

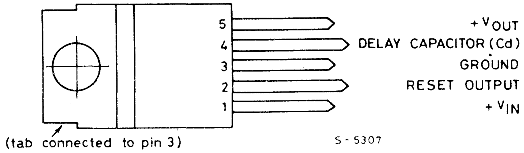

BLOCK DIAGRAM

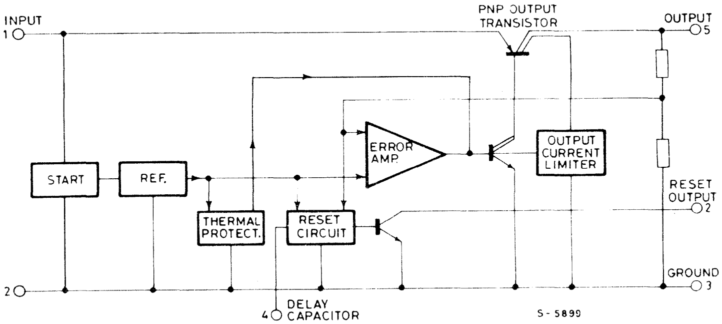

THERMAL DATA

$R_{th\ j\text{-}case}$	Thermal resistance junction-case	max	3	°C/W

ELECTRICAL CHARACTERISTICS (Refer to the test circuit, V_i = 12V, T_j = 25°C, unless otherwise specified)

Parameter		Test conditions	Min.	Typ.	Max.	Unit
V_o	Output voltage	I_o = 5 mA to 500 mA	4.80	5	5.20	V
V_i	Operating input voltage				26	V
ΔV_o	Line regulation	V_i = 6 to 26V I_o = 5 mA		5	50	mV
ΔV_o	Load regulation	I_o = 5 to 500 mA		15	60	mV
V_i-V_o	Dropout voltage	I_o = 500 mA		0.60	0.8	V
I_q	Quiescent current	I_o = 0 mA I_o = 150 mA I_o = 500 mA		5 20 100	— 40 250	mA
$\frac{\Delta V_o}{\Delta T}$	Temperature output voltage drift			-0.5		mV/°C
SVR	Supply voltage rejection	I_o = 350 mA f = 120 Hz C_o = 100 μF V_i = 12V ± 5 Vpp		60		dB
I_{sc}	Output short circuit current			0.8		A
V_R	Reset output voltage	I_R= 16 mA $V_o \leqslant$ 4.75V			0.8	V
I_R	Reset output leakage current	V_o in regulation			50	μA
t_d	Delay time for reset output	Cd = 100 nF		30		ms
V_{RT}	Reset threshold		4.75	V_o -150mV		V
V_{RTH}	Threshold hysteresis			10		mV

Fig. 1 - Droupout voltage vs. output current

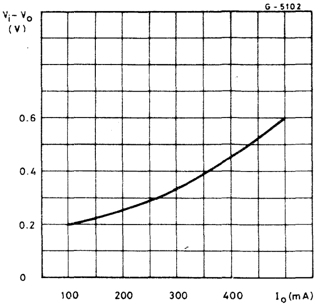

Fig. 2 - Quiescent current vs. output current

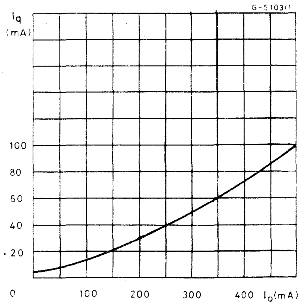

Fig. 3 - Output voltage vs. temperature

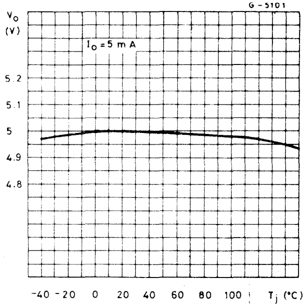

L465A

LINEAR INTEGRATED CIRCUITS

ADVANCE DATA

HIGH EFFICIENCY POWER OPERATIONAL AMPLIFIER

- OUTPUT CURRENT TO 4A
- SUPPLY VOLTAGE TO ± 20V
- LARGE COMMON-MODE RANGE
- LARGE DIFFERENTIAL MODE RANGE
- LARGE BANDWIDTH
- LOW SATURATION
- SOA PROTECTION
- SHORT CIRCUIT PROTECTION
- THERMAL PROTECTION

The L465A is a monolithic integrated circuit in Pentawatt® package, intended for use as power operational amplifier in a wide range of applications, including servo amplifiers and power supplies.
The high gain and high output power capability provide superior performance wherever an operational amplifier/power booster combination is required.

ABSOLUTE MAXIMUM RATINGS

V_s	Supply voltage	± 20	V
V_i	Input voltage	V_s	
V_i	Differential input voltage	± 15	V
I_o	Peak output current (internally limited)	4	A
P_{tot}	Power dissipation at $T_{case} = 90°C$	20	W
T_{stg}, T_j	Storage and junction temperature	-40 to 150	°C

ORDERING NUMBER: L465A

MECHANICAL DATA

Dimensions in mm

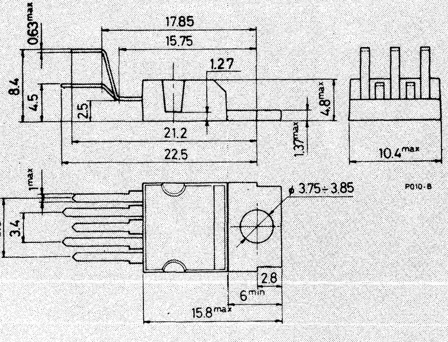

CONNECTION DIAGRAM
(top view)

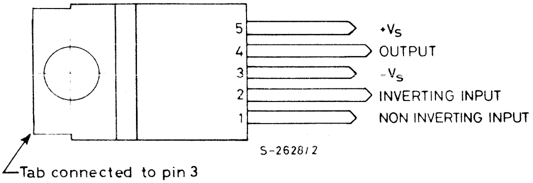

Fig. 1 - Application circuit ($G_V > 20$ dB)

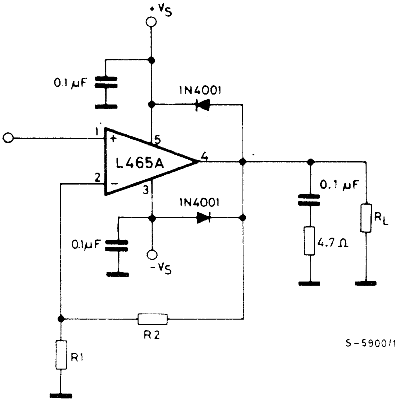

Fig. 2 - Application circuit (Unity gain)

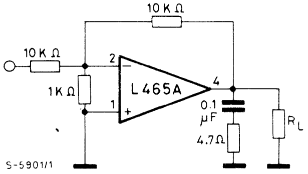

THERMAL DATA

$R_{th\ j\text{-}case}$	Thermal resistance junction-case	max	3	°C/W

ELECTRICAL CHARACTERISTICS (V_s = ± 15V, T_{amb}= 25°C unless otherwise specified)

Parameter		Test conditions		Min.	Typ.	Max.	Unit
V_s	Supply voltage			± 3		±20	V
I_d	Quiescent drain current	V_s ± 18V			45		mA
I_b	Input bias current				0.3	1	μA
V_{os}	Input offset voltage				± 2	± 20	mV
I_{os}	Input offset current					± 200	nA
SR	Slew-Rate				14		V/μs
V_o	Output voltage swing	f = 1 kHz	I_p = 0.5A	26	27		Vpp
			I_p = 4A		25		
		f = 10 kHz	I_p = 0.5A		27		Vpp
			I_p = 4A		24		
B_W	Power bandwidth	P_o = 1V	R_L = 4Ω		100		kHz
R_i	Input resistance (pin 1)	f = 1 KHz		100	500		KΩ
G_v	Voltage gain (open loop)				80		dB
e_N	Input noise voltage	B = 10 to 10 000 Hz			2	6	μV
i_N	Input noise current				100		pA
CMR	Common mode rejection	$R_g \leqslant$ 10 KΩ	G_v = 30 dB		70		dB
SVR	Supply voltage rejection	R_g = 22 kΩ V_{ripple}= 0.5 V_{rms} f_{ripple} = 100 Hz	G_v = 10		60		dB
			G_v = 100		40		dB
η	Efficiency	f = 1 kHz R_L = 4Ω	I_p = 3A		66		%
T_{sd}	Thermal shutdown junction temperature				145		°C

APPLICATION INFORMATION

This circuit carries out bidirectional speed control of DC motors (fig. 3).
The motor runs in one direction or in another according to whether the input voltage is higher or lower than $V_s/2$. The output impedance of the circuit seen by the motor is $R_o = \frac{-2\ R4\ R1}{R_x}$ so by imposing that the equation $R_M = R_o$ (R_M = internal resistance of motor) is checked the maximum load regulation condition is obtained. For circuit stability it should be $R_M > |R_o|$ hence we get

$$R_X > \frac{2\ R4 \cdot R1}{R_M}$$

The voltage available at the terminals of the motor is

$$V_M = 2\,(V_{in} - \frac{V_s}{2}) + |\,R_o\,| \cdot I$$

Fig. 3 - Bidirectional speed control of DC motors

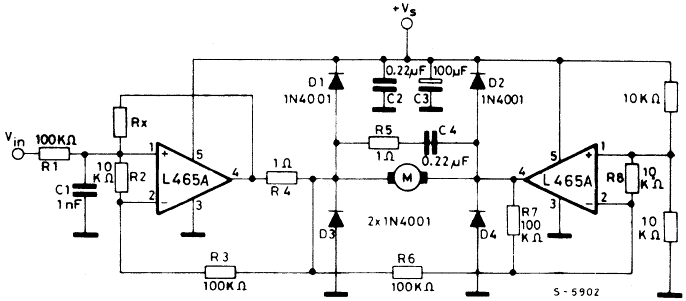

Fig. 4 - Bidirectional DC motor control with TTL/C-MOS/μP compatible inputs

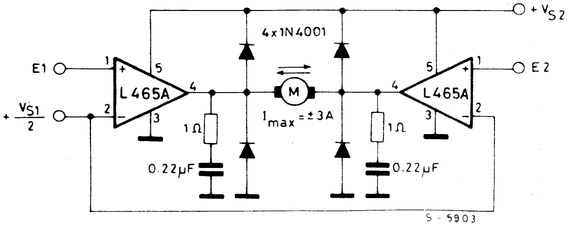

V_{S1} = logic supply voltage Must be $V_{S2} \geqslant V_{S1}$ E1, E2 = logic inputs

L487

LINEAR INTEGRATED CIRCUITS

PRELIMINARY DATA

VERY LOW DROP 5V VOLTAGE REGULATOR WITH RESET

- PRECISE OUTPUT VOLTAGE (5V ± 4%)
- VERY LOW DROPOUT VOLTAGE
- OUTPUT CURRENT IN EXCESS OF 500 mA
- POWER-ON, POWER-OFF INFORMATION (RESET FUNCTION)
- + 80/-80V LOAD DUMP PROTECTION
- OVERVOLTAGE AND REVERSE VOLTAGE PROTECTION
- SHORT CIRCUIT PROTECTION AND THERMAL SHUT-DOWN

The L487 is a monolithic integrated circuit in Pentawatt® package specially designed to provide a stabilized supply voltage for automotive and industrial electronic systems. Thanks to its very low voltage drop, in automotive applications the L487 can work correctly even during the cranking phase, when the battery voltage could fall as low as 6V. Furthermore, it incorporates a complete range of protection circuits against the dangerous overvoltages always present on the battery rail of the car. The reset function makes the device particularly suited to supply microprocessor based systems: a pulse is available (after an externally programmable delay) to reset the microprocessor at power-on phase; at power-off, this pulse becomes low inhibiting the microprocessor.

ABSOLUTE MAXIMUM RATINGS

V_i	Forward input voltage	35	V
V_i	Reverse input voltage	-18	V
	Positive transient peak voltage (t = 300 ms)	80	V
	Negative transient peak voltage (t = 100 ms)	-80	V
T_{op}	Operating junction temperature	-40 to 150	°C
T_{stg}	Storage temperature	-55 to 150	°C

ORDERING NUMBER: L487

MECHANICAL DATA

Dimensions in mm

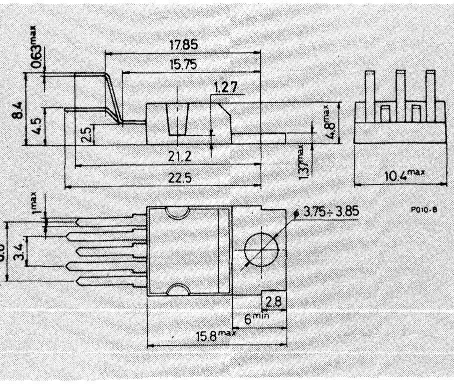

CONNECTION DIAGRAM (top view)

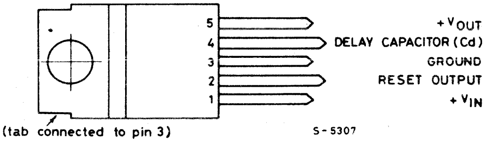

BLOCK DIAGRAM

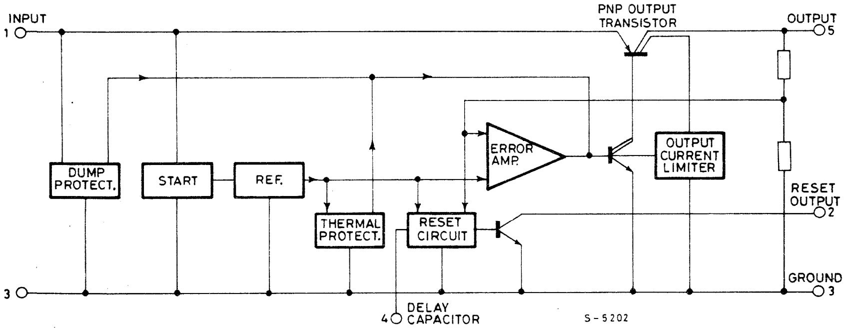

TEST CIRCUIT

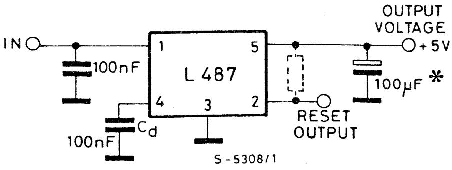

* Min. 20 µF

THERMAL DATA

$R_{th\ j\text{-}case}$	Thermal resistance junction-case	max	3	°C/W

ELECTRICAL CHARACTERISTICS (Refer to the test circuit, V_i = 14.4V, T_{amb} = 25°C, unless otherwise specified)

	Parameter	Test conditions	Min.	Typ.	Max.	Unit
V_o	Output voltage	I_o = 5 mA to 500 mA	4.80	5	5.20	V
V_i	Operating input voltage	(*) See note			28	V
→ ΔV_o	Line regulation	V_i = 6 to 26V I_o = 5 mA		5	50	mV
→ ΔV_o	Load regulation	I_o = 5 to 500 mA		15	60	mV
→ V_i-V_o	Dropout voltage	I_o = 500 mA		0.6	0.9	V
→ I_q	Quiescent current	I_o = 0 mA I_o = 150 mA → I_o = 500 mA		6 20 130	20 40 250	mA
$\frac{\Delta V_o}{\Delta T}$	Temperature output voltage drift			-0.5		mV/°C
SVR	Supply voltage rejection	I_o = 350 mA f = 120 Hz C_o = 100 μF V_i = 12V ± 5 Vpp		55		dB
I_{sc}	Output short circuit current			0.8		A
V_R	Reset output voltage	I_R = 16 mA $V_o \leqslant$ 4.75V			0.8	V
I_R	Reset output leakage current	V_o in regulation			50	μA
t_d	Delay time for reset output	Cd = 100 nF		30		ms
V_{RT}	Reset threshold		4.75	V_o-0.15		V
V_{RTH}	Threshold hysteresis			10		mV

(*) For a DC input voltage 28 < V_i < 35V the device is not operating.

Fig. 1 - Dropout voltage vs. output current

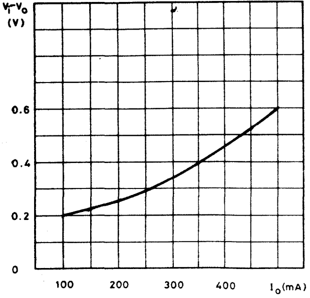

Fig. 2 - Quiescent current vs. output current

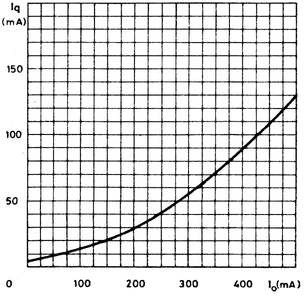

Fig. 3 - Output voltage vs. temperature

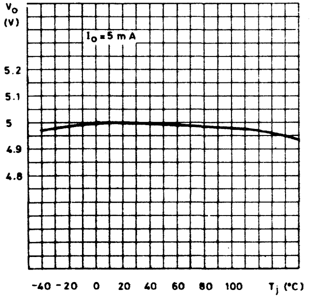

LINEAR INTEGRATED CIRCUITS

L601 L602
L603 L604

DARLINGTON ARRAYS

- EIGHT DARLINGTONS PER PACKAGE
- OUTPUT CURRENT 400 mA PER DRIVER (500 mA peak)
- OUTPUT VOLTAGE 90V ($V_{CE(sus)}$= 70V)
- INTEGRAL SUPPRESSION DIODES FOR INDUCTIVE LOADS
- OUTPUTS CAN BE PARALLELED FOR HIGHER CURRENT
- TTL/CMOS/PMOS/DTL COMPATIBLE INPUTS
- INPUTS PINNED OPPOSITE OUTPUTS TO SIMPLIFY LAYOUT

The L601, L602, L603 and L604 are high voltage, high current darlington arrays each containing eight open collector darlington pairs with common emitters. Each channel is rated at 400 mA and can withstand peak currents of 500 mA. Suppression diodes are included for inductive load driving and the inputs are pinned opposite the outputs to simplify board layout.

The four versions interface to all common logic families:

L601	General purpose, DTL, TTL, PMOS, CMOS
L602	14-25V PMOS
L603	5V TTL, CMOS
L604	6 - 15V CMOS, PMOS

These versatile devices are useful for driving a wide range of loads including solenoids, relays DC motors, LED displays, filament lamps, thermal printheads and high power buffers.

The L601, L602, L603 and L604 are supplied in 18 pin plastic DIP packages with a copper leadframe to reduce thermal resistance.

ABSOLUTE MAXIMUM RATINGS

V_{CEX}	Collector emitter voltage (input open)	90	V
I_C	Collector current	0.4	A
I_C	Collector peak current	0.5	A
V_i	Input voltage (for L602, L603 and L604)	30	V
I_i	Input current (for L601 only)	25	mA
P_{tot}	Total power dissipation a T_{amb}= 25°C	1.8	W
T_{op}	Operating junction temperature	-25 to 150	°C
T_{stg}	Storage temperature	-55 to 150	°C

ORDERING NUMBERS: L601B, L602B, L603B, L604B

MECHANICAL DATA

Dimensions in mm

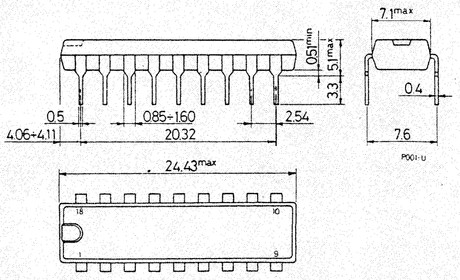

Supersedes issue dated 3/83

CONNECTION DIAGRAM

(top view)

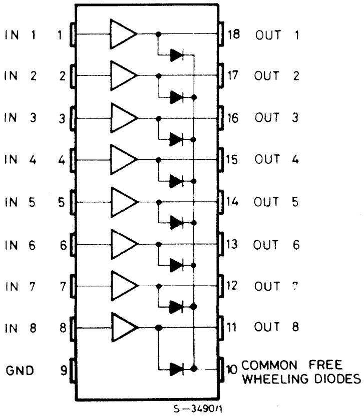

SCHEMATIC DIAGRAMS

L601

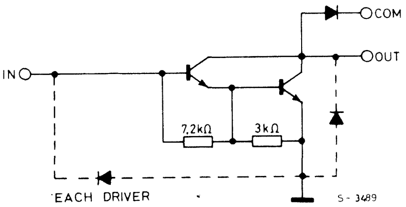

L602

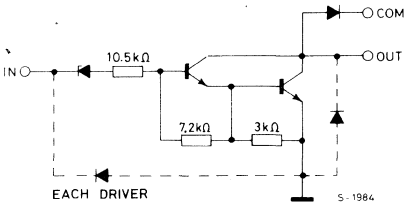

L603

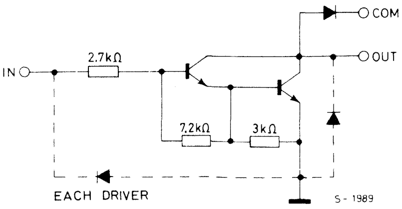

L604

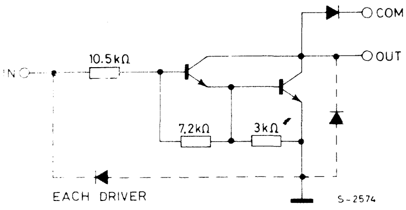

THERMAL DATA

$R_{th\ j\text{-}amb}$	Thermal resistance junction-ambient	max	70	°C/W

ELECTRICAL CHARACTERISTICS (T_{amb}= 25°C, unless otherwise specified)

Parameter		Test conditions	Min.	Typ.	Max.	Unit
I_{CEX}	Output leakage current	V_{CE}= 90V			10	μA
$V_{CE(sat)}$	Collector emitter saturation voltage	I_C= 300 mA I_B= 500 μA I_C= 200 mA I_B= 350 μA I_C= 100 mA I_B= 250 μA			2 1.7 1.2	V V V
h_{FE}	DC forward current gain (L601 only)	V_{CE}= 3V I_C= 300 mA	1000			–
V_i	Minimum input voltage (ON condition)	V_{CE}= 3V I_C= 300 mA for L602 for L603 for L604			 11.5 2.5 5	 V V V
V_i	Maximum input voltage (OFF condition)	V_{CE}= 90V I_C= 25 μA for L601 for L602 for L603 for L604	 0.55 7 0.75 1			 V V V V
I_R	Clamp diode reverse current	V_R= 90V			50	μA
V_F	Clamp diode forward voltage	I_F= 300 mA		2	2.4	V
t_{on}	Turn-on delay	0.5 V_i to 0.5 V_o		0.4		μs
t_{off}	Turn-off delay	0.5 V_i to 0.5 V_o		0.4		μs

SGS

L702

LINEAR INTEGRATED CIRCUITS

2A QUAD DARLINGTON SWITCH

- SUSTAINING VOLTAGE: 70V
- 2A OUTPUT
- HIGH CURRENT GAIN
- IDEAL FOR DRIVING SOLENOIDS, DC MOTORS, STEPPER MOTORS, RELAYS, DISPLAYS, ETC.

The L 702 is a monolithic integrated circuit for high current and high voltage switching applications. It comprises four darlington transistors with common emitter and open collector, suitable for current sinking applications, mounted on the new POWERDIP and Multiwatt® packages.
This circuit reduces components, sizes and costs; it can provide direct interface between low level logic and a variety of high current applications.

ABSOLUTE MAXIMUM RATINGS

V_{CEX}	Collector-emitter voltage (input open)		90	V
V_i	Input voltage		30	V
I_C	Collector current		2	A
I_C	Collector peak current (repetitive)		3	A
P_{tot}	Total power dissipation at $T_{pin\ 9\ to\ 16} \leq 90°C$	Powerdip	4	W
	Total power dissipation at $T_{amb} \leq 70°C$		1.1	W
	Total power dissipation at $T_{case} \leq 90°C$	Multiwatt	20	W
T_{stg}	Storage temperature		-55 to 150	°C
T_j	Operating junction temperature		-25 to 150	°C

ORDERING NUMBER: L 702B - Powerdip
L 702N - Multiwatt

MECHANICAL DATA

Dimensions in mm

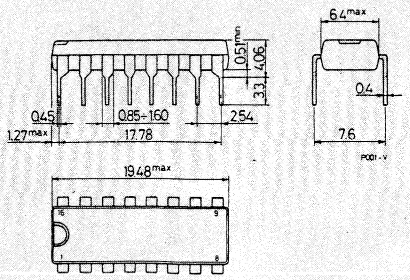

Powerdip

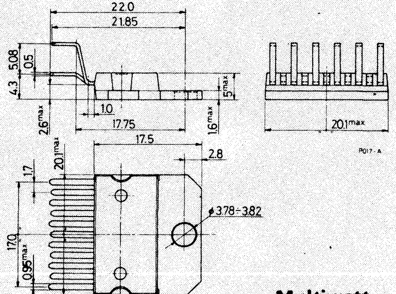

Multiwatt

CONNECTION DIAGRAMS (top view)

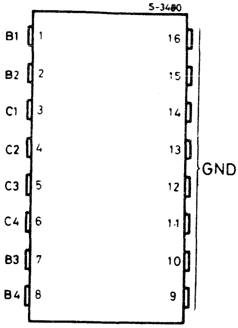

Powerdip

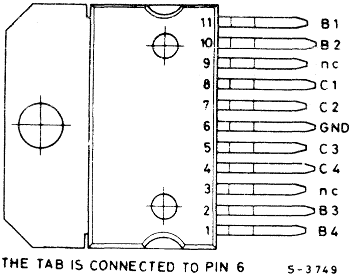

Multiwatt

SCHEMATIC DIAGRAM (each Darlington)

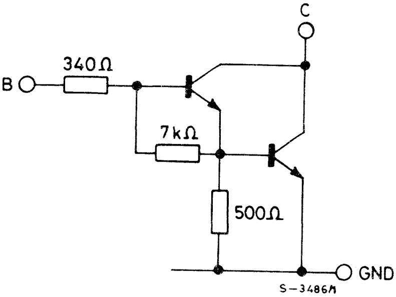

THERMAL DATA

$R_{th\ j\text{-}amb}$	Thermal resistance junction ambient	Powerdip	max	70	°C/W
$R_{th\ j\text{-}pins\ 9/16}$	Thermal resistance junction pins 9 to 16		max	14	°C/W
$R_{th\ j\text{-}case}$	Thermal resistance junction-case	Multiwatt	max	3	°C/W

ELECTRICAL CHARACTERISTICS (T_{case} = 25°C unless otherwise specified)

Parameter		Test conditions	Min.	Typ.	Max.	Unit
I_{CEX}	Output leakage current	V_{CE} = 90V		10	50	μA
$V_{CE\ (sust)}$	Collector emitter (°) sustaining voltage	I_C = 100 mA	70			V
$V_{CE\ (sat)}$	Collector emitter saturation voltage	I_C = 1.25A I_i = 2 mA		1.3	1.9	V
h_{FE}	DC forward current gain	I_C = 1A V_{CE} = 3V	1000	4000		
I_i	Input current	V_i = 3.75V V_i = 2.4V open collector		7 3	11 6	mA mA
V_i	Input voltage off condition	V_{CE} = 70V $I_C \leqslant$ 0.1 mA			0.4	V
	on condition	V_{CE} = 3V $I_C \geqslant$ 1A	2.4			V
t_{on}	Turn on time	V_s = 12V		0.3		μs
t_{off}	Turn off time	R_L = 10 Ω		1		μs

(°) Pulsed: pulse duration = 300 μs, duty cycle = 1.5%.

Fig. 1 - Switching time

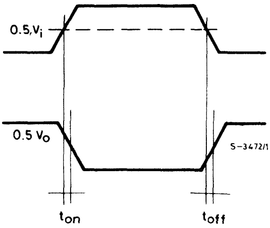

Fig. 2 - t_{on} and t_{off} test circuit

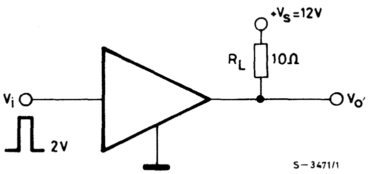

Fig. 3 - Peak collector current vs. duty cycle and number of outputs(L702B only)

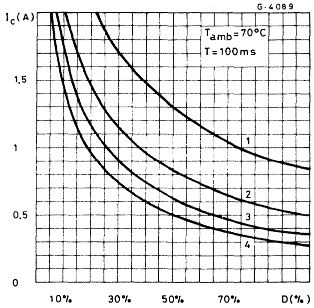

Fig. 4 - Collector emitter saturation voltage vs. collector current

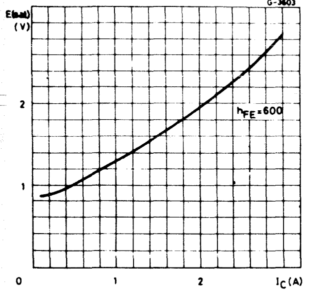

Fig. 5 - Collector current vs. input voltage

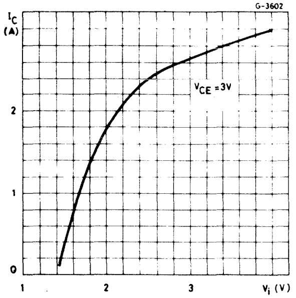

Fig. 6 - Input current vs. input voltage

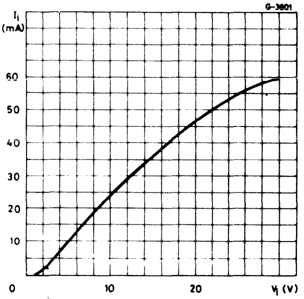

Fig. 7 - Safe operating areas (L702B)

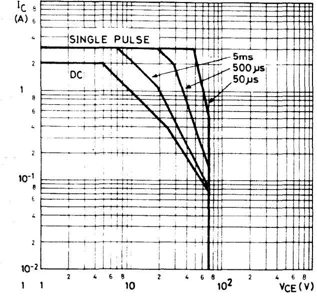

Fig. 8 - Safe operating areas (L702N)

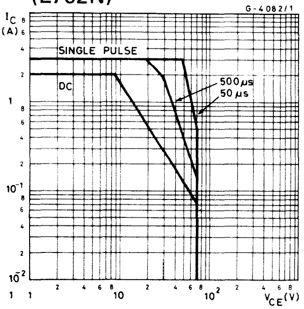

Fig. 9 - DC current gain vs. collector current (*)

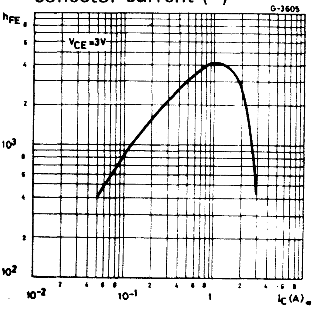

(*) Pulse width = 300 μs, duty cycle 1.5%.

Fig. 10 - Stepping motor buffer

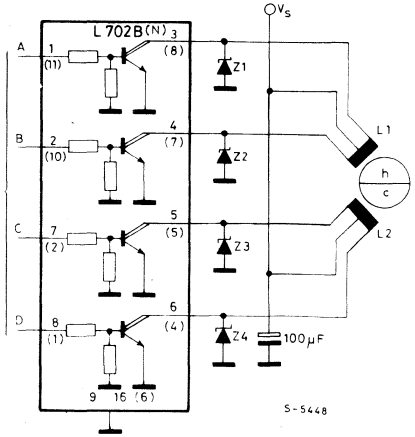

SGS

L2605
L2685
L2610

LINEAR INTEGRATED CIRCUITS

PRELIMINARY DATA

VOLTAGE REGULATORS FOR AUTOMOTIVE AND INDUSTRIAL APPLICATIONS

- OUTPUT VOLTAGE OF 5, 8.5 AND 10V
- OUTPUT CURRENT UP TO 500 mA
- NO EXTERNAL COMPONENTS
- LOW DROP-OUT VOLTAGE
- LOAD DUMP VOLTAGE SURGE PROTECTION
- REVERSE VOLTAGE PROTECTION
- SHORT CIRCUIT PROTECTION
- CURRENT LIMITING
- THERMAL SHUTDOWN

The L2600 series of three terminal positive regulators is specially designed to stabilize power supplies for car instrumentation in vehicles with 12V battery. They can supply an output current up to 500 mA.

ABSOLUTE MAXIMUM RATINGS

V_i	DC input voltage	35	V
V_i	DC input reverse voltage	-28	V
V_d	Positive transient peak voltage (t = 40 ms, duty cycle = 1%)	+ 100	V
V_d	Negative transient peak voltage (t = 30 ms, duty cycle = 1%)	- 100	V
T_{op}	Operating temperature	-40 to 150	°C
T_{stg}	Storage temperature	-65 to 150	°C
P_{tot}	Power dissipation	Internally limited	

ORDERING NUMBERS: L2605V (V_o= 5V)
L2685V (V_o= 8.5V)
L2610V (V_o= 10V)

MECHANICAL DATA

Dimensions in mm

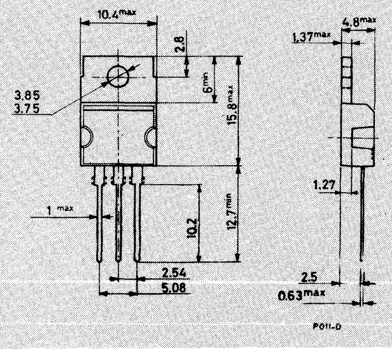

CONNECTION AND BLOCK DIAGRAMS

(top view)

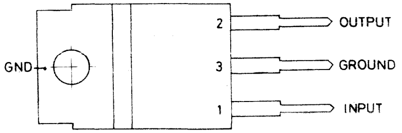

S - 2568/1

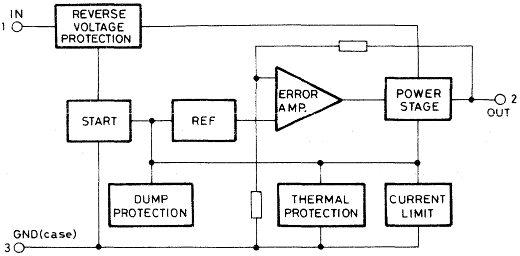

S-4005

THERMAL DATA

$R_{th\ j\text{-}case}$	Thermal resistance junction-case	max.	4 °C/W

ELECTRICAL CHARACTERISTICS ($T_{amb} = 25°$)

Parameter		Test conditions		Min.	Typ.	Max.	Unit
V_o	Output voltage	I_o = 500 mA	V_i = 12 to 16V (L2605) V_i = 12 to 16V (L2685) V_i = 12 to 16V (L2610)	4.8 8.15 9.55	5 8.5 10	5.2 8.85 10.45	V
V_i	Operating input voltage	see note (°)				28	V
ΔV_o	Line regulation	I_o = 50 mA	V_i = 12 to 16V		2		mV
$\frac{\Delta V_o}{V_o}$	Load regulation	V_i = 14V	I_o = 50 to 500 mA		0.3		%
$\Delta V_{i\text{-}o}$	Dropout voltage	I_o = 500 mA				1.9	V
$\frac{\Delta V_o}{\Delta T}$	Output voltage drift	I_o = 50mA T_{amb} = -12 to 80°C	V_i = 14V		-1		mV/°C
I_{sc}	Output short circuit current	V_i = 14V			900		mA
SVR	Supply voltage rejection	V_i = 16V f = 100Hz	ΔV_i = 2V I_o = 500mA		60		dB
R_o	Output resistance	I_o = 500mA			0.05		Ω
e_N	Output noise voltage	BW = 100Hz to 10KHz			20		μV

(°) Note: For a DC input voltage 28V $< V_i <$ 35V the device is not operating

L3654

LINEAR INTEGRATED CIRCUITS

PRINTER SOLENOID DRIVER

The L3654 is a printer solenoid driver containing ten open-collector driver outputs and a ten-bit serial-in, parallel-out shift register.

Data is clocked into the shift register serially and transferred to the open-collector outputs by an enable input. Serial input data is loaded by the rising edge of the clock. A serial output from the tenth bit is provided which changes at the falling edge of the clock. This output is not controlled by the enable input and remains active at all time.

Output stages are inhibited when the logic supply voltage falls below 6V.

Each output is rated at 250 mA (sink) and is clamped to ground internally at 50V to dissipate stored energy in inductive loads.

The L3654 is supplied in a 16 lead dual in-line plastic package, and its main fields of application comprise thermal printers, cash registers and printing pocket calculators.

ABSOLUTE MAXIMUM RATINGS

V_s	Supply voltage	9.5	V
V_i	Input voltage	9.5	V
V_E	External supply voltage	45	V
I_o	Output current (single output)	0.4	A
I_g	Ground current	4.0	A
P_{tot}	Total power dissipation (T_{amb} = 70°C)	1	W
T_{stg}, T_j	Storage and junction temperature	-65 to 150	°C

ORDERING NUMBER: L3654

MECHANICAL DATA

Dimensions in mm

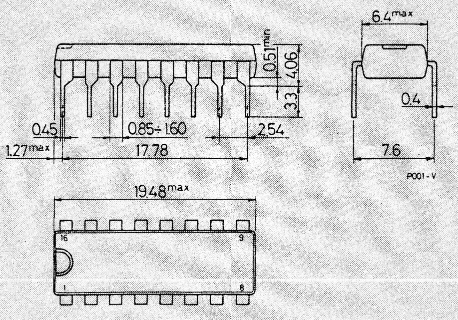

CONNECTION DIAGRAM
(top view)

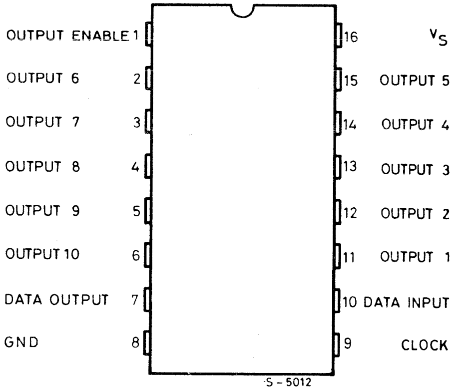

LOGIC DIAGRAM

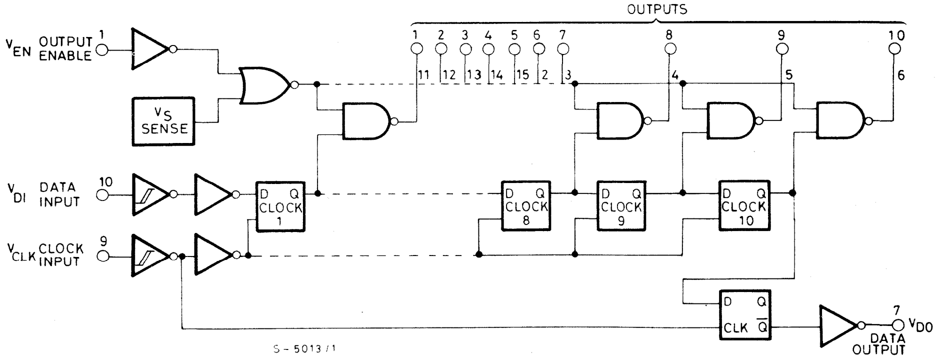

THERMAL DATA

$R_{th\ j\text{-}amb}$	Thermal resistance junction-ambient	max	80	°C/W

ELECTRICAL CHARACTERISTICS (V_s= 8.5V, V_{ss}= 30V, T_{amb}= 0° to 70°C, unless otherwise specified)

Parameter		Test conditions		Min.	Typ.	Max.	Unit
V_s	Supply voltage			7.5		9.5	V
I_S	Supply current	T_{amb}= 25°C	V_{EN}= 0V; V_{DO}= 0V		27	40	mA
		V_s = 9.5V	V_{EN}= 2.6V I_o = 250 mA (each bit)		55	70	mA
V_E	External operating supply voltage					40	V
I_{leak}	Output leakage current (each output)	V_{ss}= 40V	V_{EN}= 0V			1	mA
V_Z	Internal clamp voltage	I_z = 0.3A	V_{EN}= 0V	45	50	65	V
$V_{CE\ sat}$	Output saturation voltage	I_o = 250 mA	V_{EN}= 2.6V			1.6	V
V_{DI} V_{CLK} V_{EN}	Input logic levels (pins 1, 9, 10)	Low State (L)				0.8	V
		High state (H)		2.6			
I_{DI}	Data input current	V_{DI}= 2.6V	T_{amb}= 70°C	0.3	0.57		mA
			T_{amb}= 0°C		0.57	0.75	
		V_{DI}= 1V	T_{amb}= 70°C		220		μA
I_{CLK}	Clock input current	V_{CLK}= 2.6V	T_{amb}= 70°C	0.2	0.33		mA
			T_{amb}= 0°C		0.33	0.5	
		V_{CLK}= 1V	T_{amb}= 70°C		125		μA
I_{EN}	Enable input current	V_{EN}= 2.6V	T_{amb}= 70°C	0.2	0.33		mA
			T_{amb}= 0°C		0.33	0.5	
		V_{EN}= 1V	T_{amb}= 70°C		125		μA
R_{IN}	Input pull-down resistance Clock input	T_{amb}= 25°C	$V_{CLK} < V_s$		8		KΩ
	Enable input	T_{amb}= 25°C	$V_{EN} < V_s$		8		
	Data input	T_{amb}= 25°C	$V_{DI} < V_s$		4.5		
V_{DO}	Output logic levels (pin 7)	Low state (L) V_{DI}= 0V	I_{DO}(pin 7)= 0		0.01	0.5	V
		High state (H) V_{DI}= 2.6V I_{DO} (pin 7) = -0.75 mA		2.6	3.4		V
R_{DO}	Output pull-down resistance (pin 7)	V_{DI}= 0V	V_{DO}= 1V		14		KΩ

Fig. 1 - Timing diagram

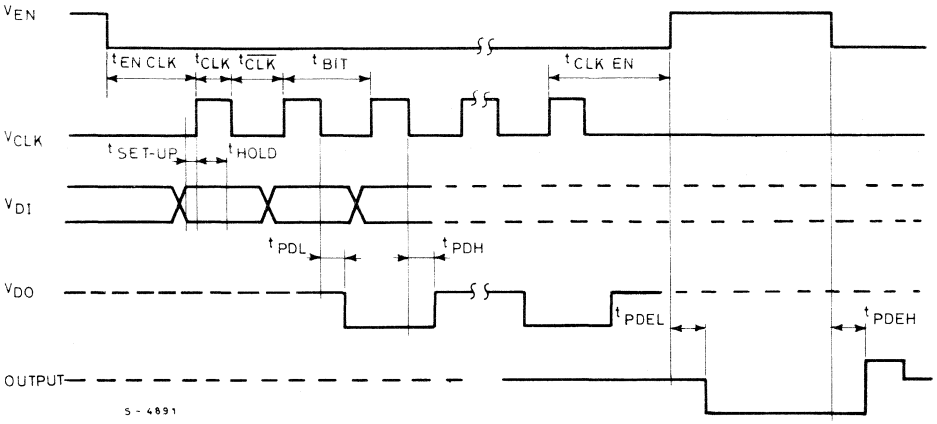

ELECTRICAL CHARACTERISTICS (see fig. 1 and the section "definition of terms")

Parameter		Test conditions	Min.	Typ.	Max.	Unit
Clock, data and enable input	t_{CLK}		4			µs
	$\overline{t_{CLK}}$		5.5			
	t_{SET-UP}		1			
	t_{HOLD}		3			
Clock to enable delay	$t_{CLK\ EN}$		2 t_{BIT}			
Enable to clock delay	$t_{EN\ CLK}$		t_{BIT}			
Data output delay	t_{PDH}, t_{PDL}	$R_L = 5K\Omega$, $C_L \leqslant 10$ pF		0.8	2.5	µs
Output delay	t_{PDEL}			3		µs
	t_{PDEH}			3.5		
Output rise time		$R_L = 100\ \Omega$, $C_L < 100$ pF		1.2		µs
Output fall time		$R_L = 100\ \Omega$, $C_L < 100$ pF		1.2		µs
V_{DO} rise time				0.4		µs
V_{DO} fall time				0.4		µs

DEFINITION OF TERMS

V_{ss} : External power supply voltage. The return for open-collector relay driver outputs.

V_{DI}, V_{CLK}, V_{EN} : The voltages at the data, clock and enable inputs respectively.

V_{DO} : The voltage at data output.

t_{BIT} : Period of the incoming clock.

t_{CLK} : The portion of t_{BIT} when $V_{CLK} \geqslant 2.6V$.

$\overline{t_{CLK}}$: The portion of t_{BIT} when $V_{CLK} \leqslant 0.8V$.

t_{HOLD} : The time following the start of t_{CLK} required to transfer data within the shift register.

$t_{SET\text{-}UP}$: The time prior to the end of $\overline{t_{CLK}}$ required to insure valid data at the shift register input for subsequent clock transitions.

LINEAR INTEGRATED CIRCUITS

SGS

L4705
L4785
L4710

PRELIMINARY DATA

VERY LOW DROP VOLTAGE REGULATORS

- INPUT/OUTPUT DROP TYP. 0.6V
- 500 mA OUTPUT CURRENT
- 80V LOAD DUMP PROTECTION
- -80V TRANSIENT PROTECTION
- REVERSE POLARITY PROTECTION
- OVERVOLTAGE PROTECTION
- OUTPUT CURRENT LIMITING
- THERMAL SHUTDOWN

L4700 series voltage regulators feature a very low voltage drop, an output current of 500 mA and protection against load dump transients of ± 80V. Available in 5V, 8.5V and 10V (± 4%) versions, these regulators also include reverse polarity protection, overvoltage protection, output current limiting and a thermal shutdown circuit.
L4700 series regulators are specially designed for automotive and industrial applications where the electrical environment is very demanding and low voltage drop is required. For example, the L4705 can be used in 5V automotive applications, continuing to function even when the battery voltage falls to 6V, a common event during starting. Moreover, the L4705 is fully protected against the transients, overvoltages and polarity reversal encountered on the battery rail.

ABSOLUTE MAXIMUM RATINGS

V_i	Forward input voltage	35	V
V_i	Reverse input voltage	-18	V
V_t	Positive transient peak voltage (t = 300 ms)	+ 80	V
V_t	Negative transient peak voltage (t = 100 ms)	-80	V
T_{op}	Operating junction temperature	-40 to 150	°C
T_{stg}	Storage temperature	-55 to 150	°C

ORDERING NUMBER: L4705CV (5V), L4785CV (8.5V), L4710CV (10V)

MECHANICAL DATA

Dimensions in mm

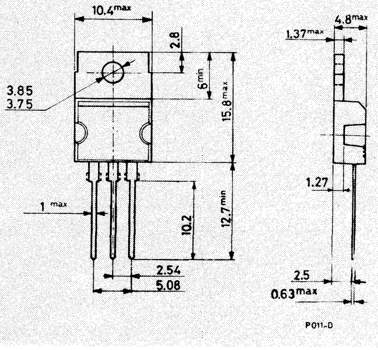

CONNECTION DIAGRAM (top view)

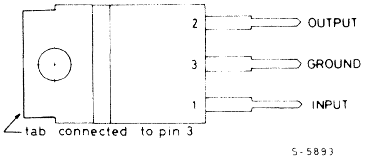

BLOCK DIAGRAM

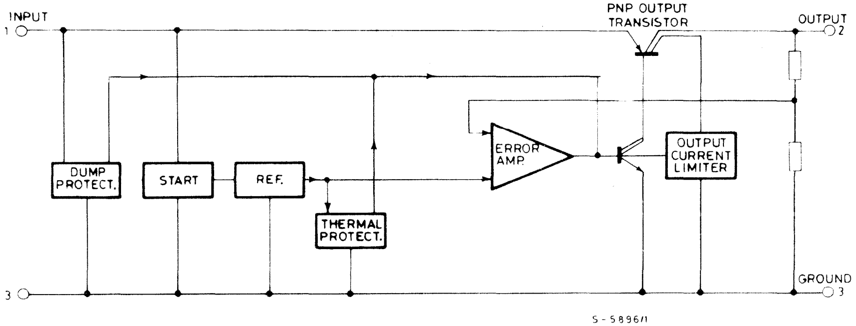

TEST AND APPLICATION CIRCUIT

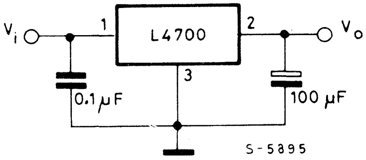

THERMAL DATA

$R_{th\ j\text{-}case}$	Thermal resistance junction-case	max	4	°C/W

ELECTRICAL CHARACTERISTICS (V_i = 14.4V, T_j = 25°C)

Parameter		Test conditions	Min.	Typ.	Max.	Unit
V_o	Output voltage	I_o = 5 mA to 500 mA	4.80	5	5.20	V
			8.16	8.5	8.84	V
			9.6	10	10.4	V
V_i	Operating input voltage	(*) see note			28	V
$\Delta V_o/V_o$	Line regulation	V_i = 11 to 26V I_o = 5 mA		1		mV/V
$\Delta V_o/V_o$	Load regulation	I_o = 5 to 500 mA		3		mV/V
V_i-V_o	Dropout voltage	I_o = 500 mA		0.6	0.9	V
I_q	Quiescent current	I_o = 0 mA		6		mA
		I_o = 150 mA		20	40	mA
		I_o = 500 mA		130		mA
$\frac{\Delta V_o}{\Delta T \cdot V_o}$	Temperature output voltage drift			0.1		$\frac{mV}{°C \cdot V}$
SVR	Supply voltage rejection	I_o = 350 mA f = 120 Hz C_o = 100 μF V_i=V_o+3V+2V_{pp}		55		dB
I_{sc}	Output short circuit current			800		mA

(*) For a DC input voltage 28V < V_i < 35V the device is not operating.

Fig. 1 - Dropout voltage vs. output current

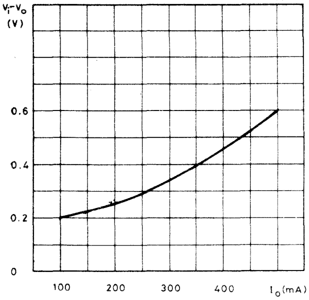

Fig. 2 - Quiescent current vs. output current

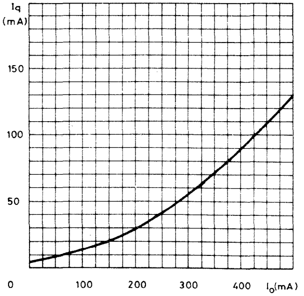

Fig. 3 - Output voltage vs. temperature

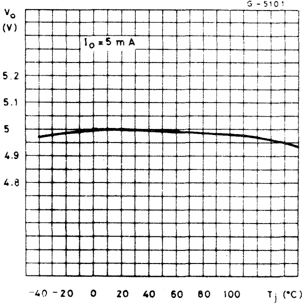

L4805
L4885
L4810

LINEAR INTEGRATED CIRCUITS

PRELIMINARY DATA

VERY LOW DROP VOLTAGE REGULATORS

- INPUT/OUTPUT DROP TYP. 0.4V
- 400 mA OUTPUT CURRENT
- LOW QUIESCENT CURRENT
- 60V LOAD DUMP PROTECTION
- -60V TRANSIENT PROTECTION
- REVERSE POLARITY PROTECTION
- OVERVOLTAGE PROTECTION
- FOLDBACK CURRENT LIMITING
- THERMAL SHUTDOWN

L4800 series devices are voltage regulators with a very low voltage drop (typically 0.4V at full rated current), output current up to 400 mA, low quiescent current and comprehensive on-chip protection. These devices are protected against load dump transients of ± 60V, input overvoltage, polarity reversal and overheating. A foldback current limiter protects against load short circuits. Available in 5V, 8.5V and 10V versions (all ± 4%), these regulators are designed for automotive, industrial and consumer applications where low consumption is particularly important.

In automotive applications the L4805 is ideal for 5V logic supplies because it functions with battery voltages as low as 5.5V. In battery backup and standby applications the low consumption of these devices extends battery life.

ABSOLUTE MAXIMUM RATINGS

V_i	Forward input voltage	26	V
V_i	Reverse input voltage	-18	V
V_t	Positive transient peak voltage (t = 300 ms)	+60	V
V_t	Negative transient peak voltage (t = 100 ms)	-60	V
T_{op}	Operating junction temperature	-40 to 150	°C
T_{stg}	Storage temperature	-55 to 150	°C

ORDERING NUMBER: L4805CV (5V), L4885CV (8.5V), L4810CV (10V)

MECHANICAL DATA

Dimensions in mm

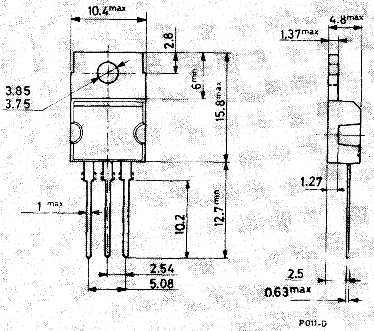

CONNECTION DIAGRAM (top view)

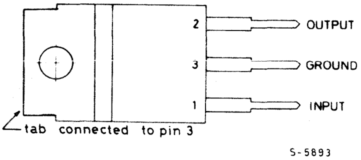

BLOCK DIAGRAM

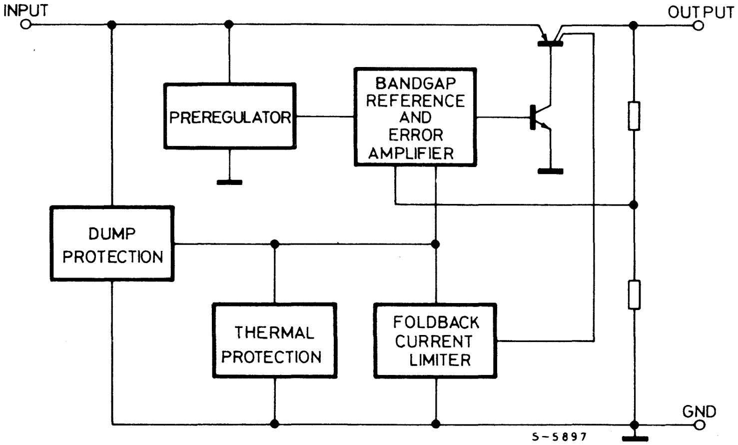

TEST AND APPLICATION CIRCUIT

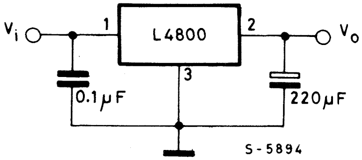

THERMAL DATA

$R_{th\ j\text{-}case}$	Thermal resistance junction–case	max	3	°C/W

ELECTRICAL CHARACTERISTICS ($V_i = 14.4V$, $T_j = 25°C$)

Parameter		Test conditions	Min.	Typ.	Max.	Unit
V_o	Output voltage	I_o = 5 mA to 400 mA	4.80	5	5.20	V
			8.16	8.5	8.84	V
			9.6	10	10.4	V
V_i	Operating input voltage				26	V
$\Delta V_o/V_o$	Line regulation	V_i = 11 to 26V I_o = 5 mA		1	10	mV/V
$\Delta V_o/V_o$	Load regulation	I_o = 5 to 400 mA		3	15	mV/V
V_i-V_o	Dropout voltage	I_o = 400 mA		0.4	0.7	V
		I_o = 150 mA		0.2	0.4	V
I_q	Quiescent current	I_o = 0 mA		0.8	3	mA
		I_o = 150 mA		16	45	mA
		I_o = 400 mA		80	100	mA
$\frac{\Delta V_o}{\Delta T \cdot V_o}$	Temperature output voltage drift			0.1		$\frac{mV}{°C \cdot V}$
SVR	Supply voltage rejection	I_o = 350 mA f = 120 Hz C_o = 100 μF $V_i=V_o+3V+2V_{pp}$		60		dB
I_o	Max output current			750		mA
I_{sc}	Output short circuit current (fold back condition)			220		mA

Fig. 1 - Dropout voltage vs. output current

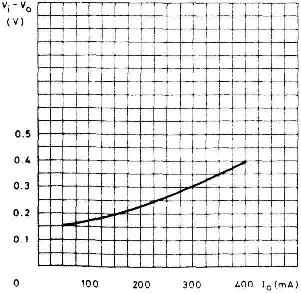

Fig. 2 - Quiescent current vs. output current

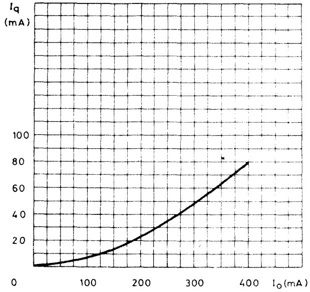

Fig. 3 - Output voltage vs. temperature

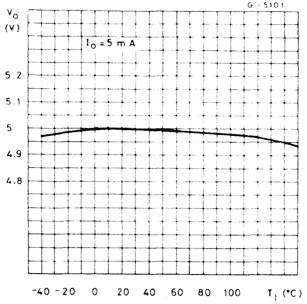

Fig. 4 - Foldback current limiting (L4805)

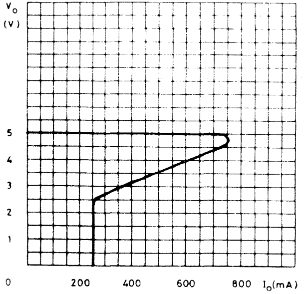

Fig. 5 - Preregulator for distributed supplies

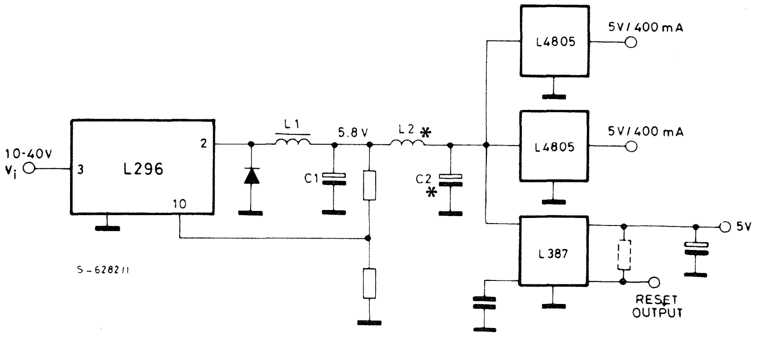

* L2 and C2 are necessary to reduce the switching frequency spikes.

L5832

LINEAR INTEGRATED CIRCUITS

ADVANCE DATA

SOLENOID CONTROLLER

- DRIVES ONE OR TWO EXTERNAL DARLINGTONS
- DUAL AND SINGLE LEVEL CURRENT CONTROL
- SWITCHMODE CURRENT REGULATION
- ADJUSTABLE PEAK DURATION
- WIDE SUPPLY RANGE (4.75-46V)
- TTL-COMPATIBLE LOGIC INPUTS
- THERMAL PROTECTION

The L5832 Solenoid Controller is designed for use with one or two external darlington transistors in solenoid and relay driving applications. The device is controlled by two logic inputs and features switchmode regulation of the load current. A key feature of the L5832 is flexibility. It can be used with a variety of darlingtons to match the requirements of the load and it allows both simple and two level current control. Moreover, the drive waveshape can be adjusted by external components. Other features of the device include thermal shutdown, a supply voltage range of 4.75-46V and TTL-compatible inputs. The L5832 is supplied in a 12 + 2 + 2 – lead Powerdip package which uses the four center pins to conduct heat to the PC board copper.

ABSOLUTE MAXIMUM RATINGS

V_s	DC Supply voltage	46	V
→ V_8	(Positive transient voltage at pin 8)	60	V
V_{en}	Enable input voltage (pin 11)	7	V
V_i	Input voltage (pin 10)	7	V
V_R	External reference voltage (pin 2)	2	V
P_d	Power dissipation (T_{case}= 80°C)	5	W
T_{stg}, T_j	Storage and junction temperature	-40 to 150	°C

ORDERING NUMBER: L5832

MECHANICAL DATA

Dimensions in mm

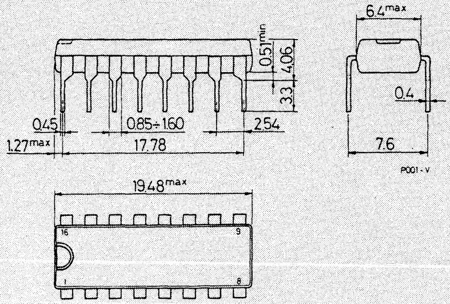

CONNECTION DIAGRAM

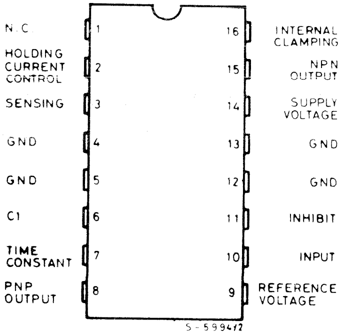

BLOCK DIAGRAM

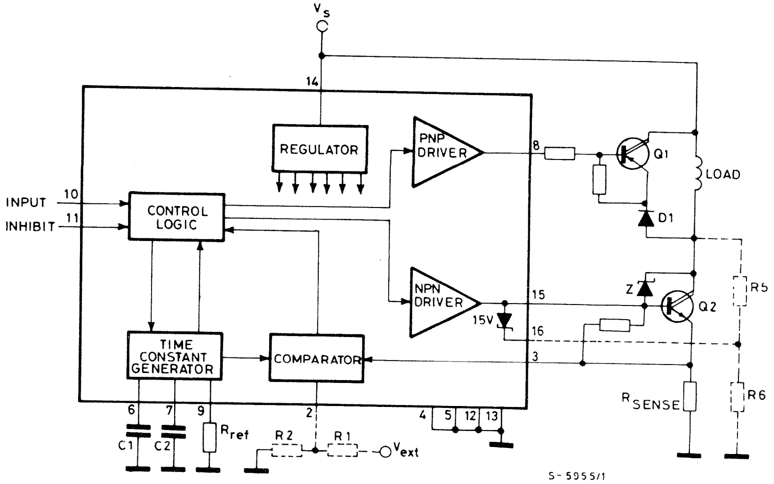

THERMAL DATA

$R_{th\ j\text{-}case}$	Thermal resistance junction-case	max	14	°C/W
$R_{th\ j\text{-}amb}$	Thermal resistance junction-ambient	max	80	°C/W

PIN FUNCTIONS

N°	NAME	FUNCTION
1	NC	Not connected. Must be left open circuit.
2	HOLDING CURRENT CONTROL	A voltage applied to this pin sets the holding current level. If left open circuit an internal 75 mV reference is used and $I_h = I_p/6$.
3	SENSING	Connection for load current sense resistor. Value sets the maximum load current. $I_p = 0.45/R_s$.
4	GROUND	Ground connection. With pins 5, 12 and 13 conducts heat to printed circuit board copper.
5	GROUND	See pin 4.
6	C1	A capacitor connected between this pin and ground sets the duration of the current peak (t2 in fig. 3). If left open, the switchmode control of the peak is suppressed. If grounded, the current does not fall to the holding level.
7	DISCHARGE TIME CONSTANT	A capacitor connected between this pin and ground sets the duration of t_{off} (fig. 3). If grounded, switchmode control is suppressed.
8	PNP DRIVING OUTPUT	Current drive output for external PNP darlington (for recirculation). $I = 35\ I_{ref}$.
9	REFERENCE VOLTAGE	A resistor connected between this pin and ground sets the internal current reference, I_{ref}. The recommended value is 1.2 kΩ, giving $I_{ref} = 1$ mA.
10	INPUT	TTL-compatible input. A high level on this pin activates the output, driving the load.
11	INHIBIT	TTL-compatible inhibit input. A high level on this input disables the output stages and logic circuitry, irrespective of the state of pin 10.
12	GROUND	See pin 4.
13	GROUND	See pin 4.
14	SUPPLY VOLTAGE	Supply voltage input.
15	NPN DRIVING OUTPUT	Current drive for external NPN darlington (in series with the load). $I = 100\ I_{ref}$.
16	INTERNAL CLAMPING	Internal zener clamp available for fast turnoff.

ELECTRICAL CHARACTERISTICS ($V_{s\ (pin\ 14)}$= 24V, T_{amb}= 25°C, R_{ref}= 1.2 kΩ, unless otherwise specified. Refer to fig. 2)

Parameter		Test conditions	Min.	Typ.	Max.	Unit
V_s	Operating supply voltage (Pin 14)		4.75		46	V
I_s	Quiescent current (Pin 14)	$V_{pin\ 10}$= $V_{pin\ 11}$= Low State		21	40	mA
V_{in}	Input voltage (Pin 10)	Low state			0.8	V
V_{en}	Enable input voltage (Pin 11)	High state	2.4			V
I_{in}	Input current (Pin 10)	Low state			100	μA
I_{en}	Enable input current (Pin 11)	High state			10	μA
V_{ref}	Internal reference voltage (Pin 9)		1.2	1.25	1.3	V
I_{ref}	Reference current (Pin 9)	I_{ref}= V_{ref}/R_{ref} R_{ref}= 1.0 kΩ			1300	μA
I_{pd}	Peak duration control current (Pin 6)	I_{pd}= $I_{ref}/8$	125	130	135	μA
t_{pd}	Peak duration time (Pin 6)	t_{pd}= C1 V_{th}/I_{pd} V_{th} = 1.4V C1 = 47 nF		500		μs
I_{od}	Off duration control current (Pin 7)	I_{od}= $I_{ref}/8$	125	130	135	μA
t_{off}	Off duration time (Pin 7)	t_{od} = C2 V_{th}/I_{od} V_{th} = 1.4V C2 = 4.7 nF		50		μs
I_{d1}	NPN driving current (Pin 15)	I_{d1} = 100 I_{ref} (only present during charging phase)	90	100	110	mA
I_{d2}	PNP driving current (Pin 8)	I_{d2} = 35 I_{ref}	32	36	40	mA
I_p	Peak current (emitter of NPN Darlington)	I_p = 450 mV/R_{sens} R_{sens} = 0.1 Ω	4.2	4.5	4.8	A
V_h	Holding current control voltage (Pin 2)	V_h = R_{sens} I_h I_h = Emitter current of NPN Darlington Pin 2 Floating	70	75	80	mV
		Pin 2 externally biased			2	V
R_{in}	Holding current control input impedance (Pin 2)		100	150	200	Ω
r	Peak to hold current ratio	Pin 2 floating	5.8	6	6.2	
		Pin 6 shorted	0.97	1	1.03	
I_B	Sense input bias current (Pin 3)				100	μA
V_{clamp}	Internal clamping (Pin 16 to 15)		14	16	18	V
	Thermal drift of reference voltage			0.5		mV/°C

APPLICATION INFORMATION

The L5832 solenoid controller is intended for use with one or two external darlington transistors to drive inductive loads such as solenoids, relays, electric valves and DC motors.

Controlled by a logic input and an inhibit input (both TTL compatible), the device drives the external darlington(s) to produce a load current waveform as shown in figure 3. This basic waveform shows that the device produces an initial current peak followed by a lower holding current. Both the peak and holding current levels are regulated by the L5832's switchmode circuitry.

The duration of the peak, the peak current level and holding current level can all be adjusted by external components.
Moreover, by omitting C1, C2 or both it is possible to realize single-level current control, a transitory peak followed by a regulated holding current or a simple peak (figure 1).

Fig. 1 - Components connected to pins 6 and 7 determine the load current waveshape

COMPONENTS ON PINS 6 AND 7	LOAD CURRENT WAVEFORM
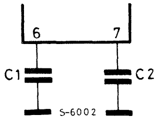	
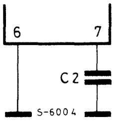	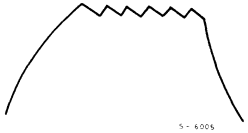
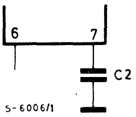	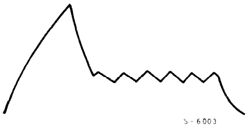
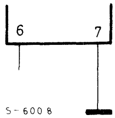	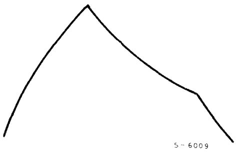

APPLICATION INFORMATION (continued)

The peak current level I_p, is set by the sensing resistor, R_{sens}, and is found from:

$$I_p = \frac{0.45}{R_{sens}}$$

The holding current level, I_h, is set by a voltage applied to pin 2. If this pin is left open circuit an internal reference of 75 mV supervenes and the holding current is given by:

$$I_h = \frac{I_p}{6}$$

Alternatively, this level may be varied by adding a divider to pin 2 (R1, R2) and suitable values are found from:

$$\frac{I_{h\ max}}{I_p} = \frac{1}{0.45V}\left(\frac{R2 // R_{in}}{R1 + R2//R_{in}} \quad Vext + \frac{R2 // R_{in}}{R_x + R2//R_{in}} \quad Vx\right)$$

where $Vx = 3V$, $Rx = 5850\Omega$. $R_{in} = 150\Omega$ (R_{in} of pin 2) and V_{ext} is the external voltage applied to the divider.

Fig. 2 - Application circuit showing all the optional components. In particular it illustrates how the holding current level is adjusted independently of the peak current (with R1, R2, V_{ext}) and how the internal zener clamp is connected. This circuit produces the waveforms shown in Fig. 3.

I_o (A)	Q1	Q2
4	BDX54	BDX53
8	BDW94	BDW93
12	BDV64	BDV65

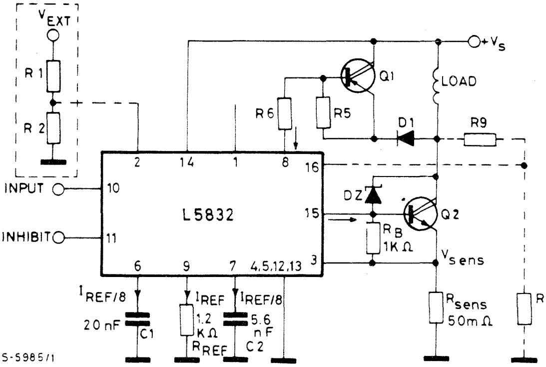

The drive currents for the two darlingtons and the waveform time constants are all defined by a reference current, I_{ref}, which is defined in turn by a resistor between pin 9 and ground.

The recommended value for I_{ref} is 1 mA which is obtained with a 1.2 kΩ resistor. From I_{ref} the darlington drive currents are given by:

$$\text{PNP} : I = 35\ I_{ref}$$
$$\text{NPN} : I = 100\ I_{ref}$$

The duration of the high current level (t2 in figure 3) is set by a capacitor connected between pin 6 and ground. This capacitor, C1, is related to the duration, T, by:

$$C1 = \frac{I_{ref}\ T}{12}$$

Fig. 3 - Waveforms of the typical application circuit of fig. 2.

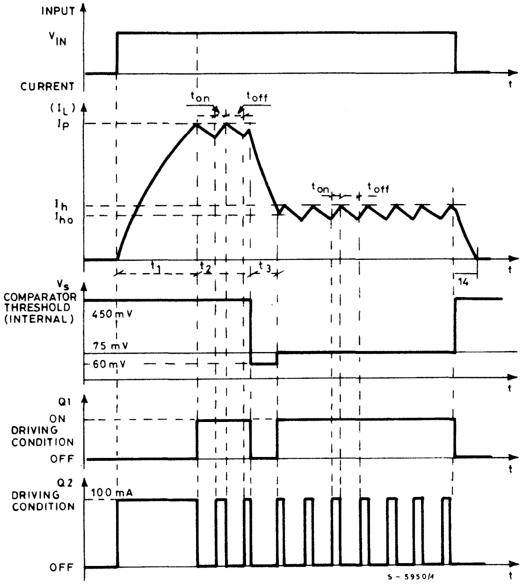

The discharge time constant (t_{off} in figure 3) is set by a capacitor between pin 7 and ground and is found from:

$$t_{off} = \frac{12C2}{I_{ref}}$$

The t_{off} and t_{on} times are also related to the current ripple, ΔI:

$$t_{off} = \frac{L \Delta I}{V_{off}} \quad \text{and } t_{on} = \frac{L \Delta I}{V_{on}}$$

where $V_{off} = V_{diode} + V_{CEQ1} + R_L\ I_L$
$V_{on} = V_s - V_{CEQ2} - V_{RS} - R_L\ I_L$
L = load inductance
R_L = load resistance
ΔI = load current ripple.

Note that t_{off} is the same for both the peak and holding currents.

Fig. 4 - When pin 6 in grounded, as shown here, the load current is regulated at a single level.

I_o (A)	Q1	Q2
4	BDX54	BDX53
8	BDW94	BDW93
10	BDV64	BDV65

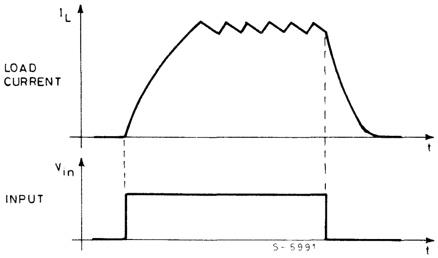

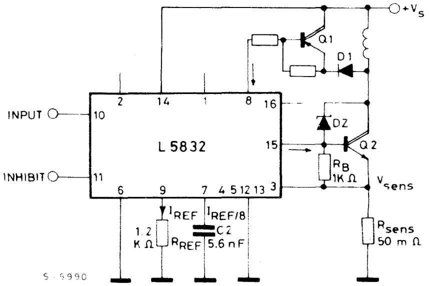

Fig. 5 - In this application circuit, pin 6 is left open to give a single peak followed by a regulated holding current.

I_o (A)	Q1	Q2
4	BDX54	BDX53
8	BDX54	BDX53
16	BDW94	BDV65

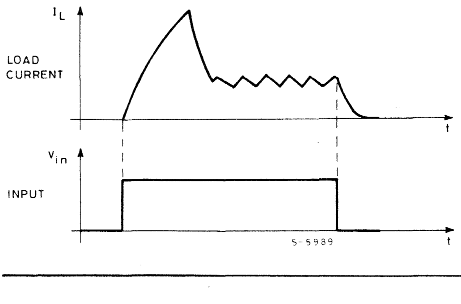

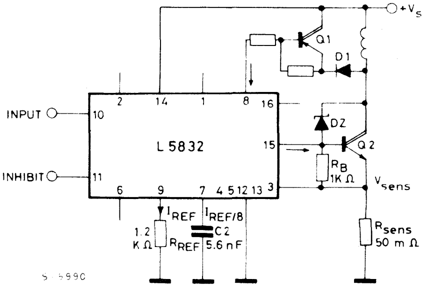

Fig. 6 - Switchmode control of the current can be suppressed entirely by leaving pin 6 open and grounding pin 7. The peak current is still controlled.

I_o (A)	Q1	Q2
4	BDX54	BDX53
8	BDW94	BDW93
10	BDV64	BDV65

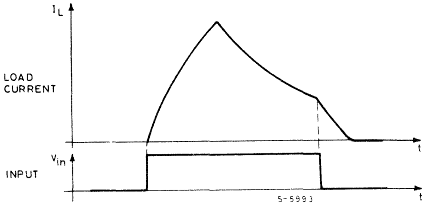

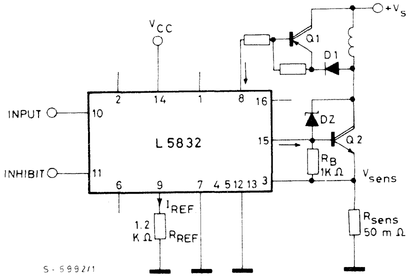

For fast turnoff an internal zener clamp is available on pin 16.
This is used with an external divider, R8 R9, as shown in figure 2. Suitable values can be found from:

$$V_{pin\ 16} \cong 15V + V_{BEQ2} + V\text{Rsense}$$

$$V_{CQ2} \cong V_{pin\ 16} \cdot \frac{R9 + R8}{R8}$$

(V_{CQ2} is the voltage at the collector of Q2).

To ensure stability, a small capacitor (about 200 pF) must be connected between the base and collector of Q2 when pin 16 is used.

For the application circuit of figure 7 $t_{off} = 12C2/I_{ref}$, as before, and the current ripple is given by:

$$t_{off} = -\frac{L}{R} \quad \frac{\ln (I_{LP} - \Delta I) \cdot R_L + V_L}{I_{LP} \cdot R_L + V_L}$$

where V_L is the voltage across the inductor during recirculation.
Note that if the load is a motor $V_L = Eg + V_D$.

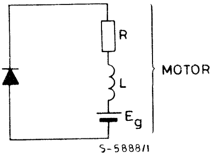

Normally Δ I is a design parameter therefore C2 can be calculated directly from:

$$C2 = \frac{-I_{ref} \cdot L}{12R_L} \cdot \frac{\ln(I_{LP} - \Delta I)\ R_L + V_L}{I_{LP} \cdot R_L + V_L}$$

This application is particularly important because it allows the use of inductive loads with the lowest possible series resistance (compatible with constructional requirements) and therefore reduces notably the power dissipation.

For example, an electric valve driven from 24V which draws 2A has a series resistance of 12Ω and dissipates 48W. Using this circuit a valve with a 2Ω series resistance can be used and the power dissipation is:

$$Pd = R_L I_L^2 + V_D I_L (1 - \delta) + V_{sat} \cdot I_L\ \delta + R_s I_L^2\ \delta$$

where R_L = resistance of valve = 2Ω
V_D = drop across diode, $V_D \cong 1V$
V_{sat} = saturation voltage of Q2, $\cong$ 1V
R_S = R11 = 220 mΩ
δ = duty cycle = 20%

therefore:

$$Pd = 8 + 1.6 + 0.4 + 0.16 = 10.16W$$

This given two advantages: the size (and cost) of the valve is reduced and the drive current is reduced from 2A to about 0.4A.
The same consideration is also true for DC motors.

Fig. 7 - Application circuit using only one darlington. The resistor and zener shown dotted activate the load when power is applied.

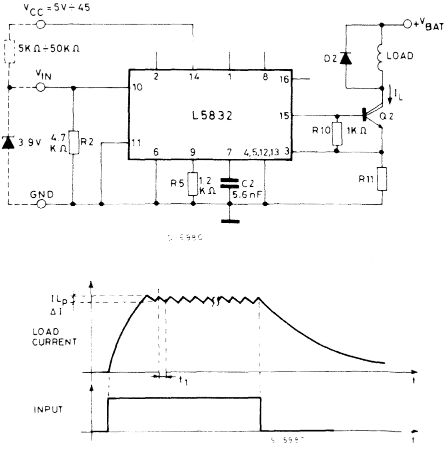

Fig. 8 - P.C. board and component layout of the circuit of fig. 7 (1:1 scale)

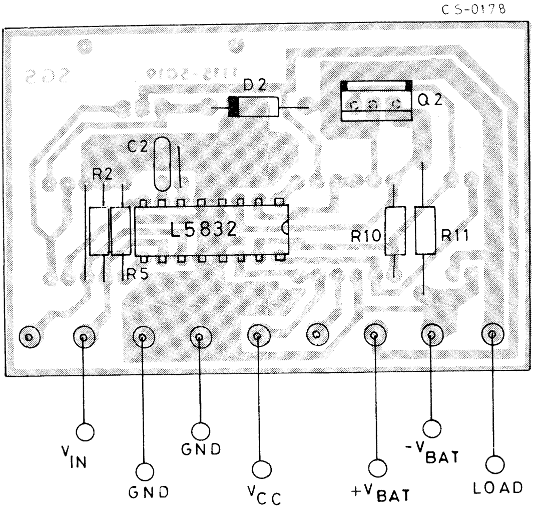

Fig. 9 - Application circuit showing how two separate supplies can be used.

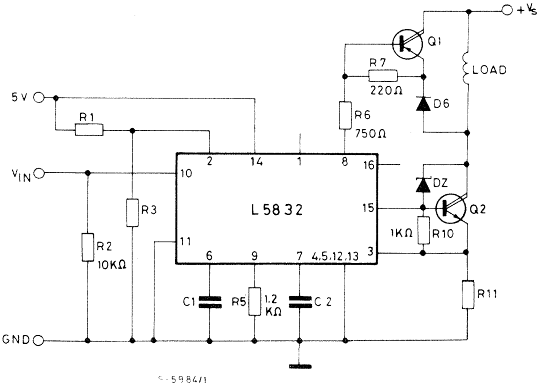

The application circuit of figure 9 is very similar to figure 2 except that it shows the use of two supplies – one for the control circuit, one for the power stage.

Choose R6 so that the voltage on pin 8 does not exceed 46V DC. This can be done simply bearing in mind that the pin 8 current is 35 I_{ref}.

R6 must not be too high if a very low supply voltage is used because:

$$V_{smin} = R6 \cdot 16 + 4.75$$

therefore

$$V_{smin} = 750 \cdot 35 \cdot 10^{-3} + 4.75 = 31V$$

The zener diode DZ can not exceed 62V because when Q1 is off and DZ triggered – the fast recirculation – the voltage on pin 8 may not exceed 60V.

L7150
L7152

LINEAR INTEGRATED CIRCUITS

ADVANCE DATA

50V QUAD DARLINGTON SWITCHES

- FOUR NPN DARLINGTONS WITH ISOLATED CONNECTIONS
- OUTPUT CURRENT TO 1.5A EACH DARLINGTON
- MINIMUM BREAKDOWN 50V
- SUSTAINING VOLTAGE AT LEAST 35V
- MULTIWATT PACKAGE ALLOWS OPERATION AT 1.5A, 50V, 100% DUTY CYCLE, ALL FOUR DEVICES ON
- INTEGRAL SUPPRESSION DIODES
- VERSIONS FOR 5V AND 6-15V LOGIC FAMILIES.

The L7150 and L7152 are 1.5A quad darlington arrays mounted in the 15-lead Multiwatt® plastic package. Each darlington is equipped with a suppression diode for inductive loads and all three terminals are isolated. A minimum breakdown of 50V is specified and the minimum sustaining voltage is 35V, measured at 100mA.

The L7150 has 350Ω input resistors and is compatible with TTL, DTL, LSTTL and 5V CMOS logic. The L7152 has 3 kΩ input resistors for use with 6-15V CMOS and PMOS logic.

These devices are suitable for driving a wide range of inductive and non-inductive loads including DC motors, stepper motors, solenoids, relays, lamps, multiplexed LEDs and heaters.

ABSOLUTE MAXIMUM RATINGS

V_{CEX}	Output voltage	50	V
$V_{CE(sus)}$	Output sustaining voltage	35	V
I_o	Output current	1.75	A
V_i	Input voltage	30	V
I_B	Input current	25	mA
P_{tot}	Power dissipation (T_{case} = 75°C)	25	W
T_{amb}	Operating ambient temperature range	0 to 70	°C
T_{stg}	Storage temperature	-55 to 150	°C

ORDERING NUMBER : L7150, L7152

MECHANICAL DATA

Dimensions in mm

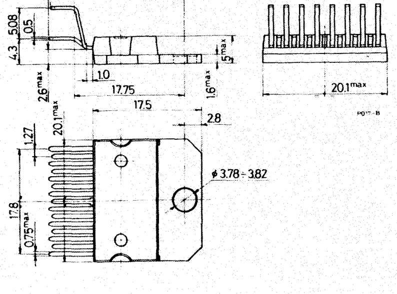

CONNECTION AND SCHEMATIC DIAGRAMS

(top view)

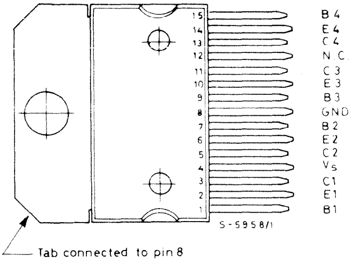

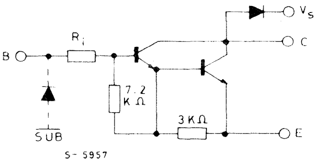

L7150 : R_{IN} = 350Ω

L7152 : R_{IN} = 3 KΩ

THERMAL DATA

$R_{th\ j\text{-}case}$	Thermal resistance junction-case	max.	3	°C/W
$R_{th\ j\text{-}amb}$	Thermal resistance junction-ambient	max.	35	°C/W

ELECTRICAL CHARACTERISTICS (T_{amb} = 25°C unless otherwise specified)

Parameter		Test conditions		Min.	Typ.	Max.	Unit	Fig.
I_{CEX}	Output leakage current	V_{CE} = 50V V_{CE} = 50V	 T_{amb} = 70°C			100 500	µA µA	1
$V_{CE(sus)}$	Collector-emitter sustaining voltage	I_C = 100mA	V_i = 0.4V	35			V	2
$V_{CE(sat)}$	Collector-emitter saturation voltage	I_C = 500mA I_C = 750mA I_C = 1A I_C = 1.25A	I_B = 625µA I_B = 935µA I_B = 1.25mA I_B = 2 mA			1.1 1.2 1.3 1.4	V V V V	3
$I_{i(on)}$	Input current	for **L7150** for **L7150** for **L7152** for **L7152**	V_i = 2.4V V_i = 3.75V V_i = 5V V_i = 12V	2 4.5 0.9 2.75		4.3 9.6 1.8 5.2	mA mA mA mA	4
$V_{i(on)}$	Input voltage	for **L7150** V_{CE} = 2V V_{CE} = 2V for **L7152** V_{CE} = 2V V_{CE} = 2V	 I_C = 1A I_C = 1.5A I_C = 1A I_C = 1.5A			 2 2.5 6.5 10	 V V V V	5
t_{PLH}	Turn-on delay time	$0.5V_i$ to $0.5V_o$				1	µs	
t_{PHL}	Turn-off delay time	$0.5V_i$ to $0.5V_o$				1.5	µs	

TEST CIRCUITS

Fig. 1

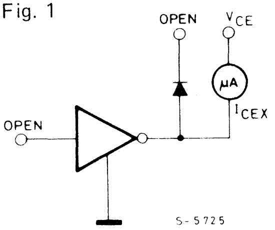

Fig. 2

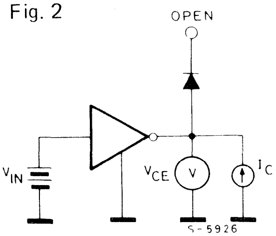

Fig. 3

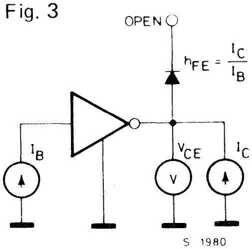

Fig. 4

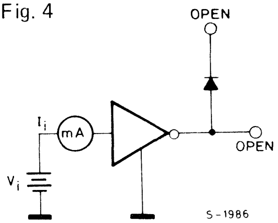

Fig. 5

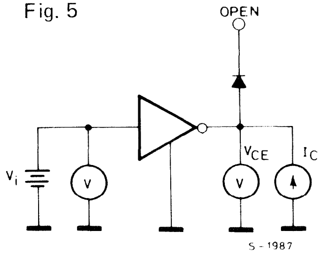

MOUNTING INSTRUCTIONS

The power dissipated in the circuit must be removed by adding an external heatsink.
Thanks to the Multiwatt® package attaching the heatsink is very simple, a screw or a compression spring (clip) being sufficient. Between the heatsink and the package it is better to insert a layer of silicon grease, to optimize the thermal contact; no electrical isolation is needed between the two surfaces.

Fig. 6 - Mounting example

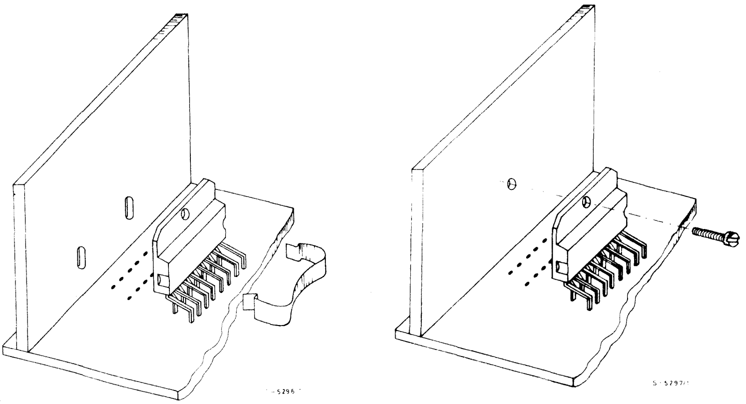

LINEAR INTEGRATED CIRCUITS

SGS

L7180
L7182

ADVANCE DATA

80V QUAD DARLINGTON SWITCHES

- FOUR NPN DARLINGTONS WITH ISOLATED CONNECTIONS
- OUTPUT CURRENT TO 1.5A EACH DARLINGTON
- MINIMUM BREAKDOWN 80V
- SUSTAINING VOLTAGE AT LEAST 50V
- MULTIWATT PACKAGE ALLOWS OPERATION AT 1.5A, 80V, 100% DUTY CYCLE, ALL FOUR DEVICES ON
- INTEGRAL SUPPRESSION DIODES
- VERSIONS FOR 5V AND 6-15V LOGIC FAMILIES.

The L7180 and L7182 are 1.5A quad darlington arrays mounted in the 15-lead Multiwatt® plastic package. Each darlington is equipped with a suppression diode for inductive loads and all three terminals are isolated. A minimum breakdown of 80V is specified and the minimum sustaining voltage is 50V.

The L7180 has 350Ω input resistors and is compatible with TTL, DTL, LSTTL and 5V CMOS logic. The L7182 has 3 kΩ input resistors for use with 6-15V CMOS and PMOS logic.

These devices are suitable for driving a wide range of inductive and non-inductive loads including DC motors, stepper motors, solenoids, relays, lamps, multiplexed LEDs and heaters.

ABSOLUTE MAXIMUM RATINGS

V_{CEX}	Output voltage	80	V
$V_{CE(sus)}$	Output sustaining voltage	50	V
I_o	Output current	1.75	A
V_i	Input voltage	60	V
I_B	Input current	25	mA
P_{tot}	Power dissipation (T_{case} = 75°C)	25	W
T_{amb}	Operating ambient temperature range	0 to 70	°C
T_{stg}	Storage temperature	-55 to 150	°C

ORDERING NUMBER : L7180, L7182

MECHANICAL DATA

Dimensions in mm

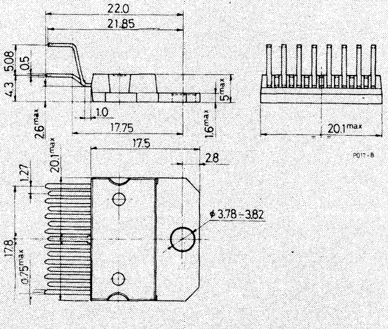

→ *Supersedes issue dated 3/83*

1/84

CONNECTION AND SCHEMATIC DIAGRAMS

(top view)

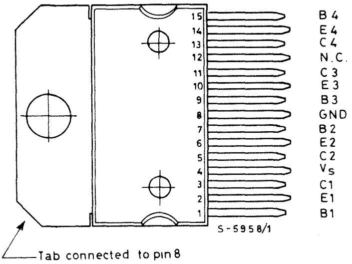

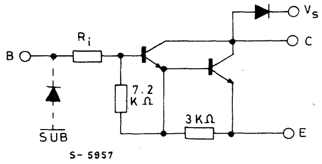

L7180 : R_{IN} = 350 Ω
L7182 : R_{IN} = 3 KΩ

THERMAL DATA

$R_{thj\text{-}case}$	Thermal resistance junction-case	max.	3	°C/W
$R_{thj\text{-}amb}$	Thermal resistance junction-ambient	max.	35	°C/W

ELECTRICAL CHARACTERISTICS (T_{amb} = 25°C unless otherwise specified)

Parameter		Test conditions		Min.	Typ.	Max.	Unit	Fig.
I_{CEX}	Output leakage current	V_{CE} = 80V V_{CE} = 80V	 T_{amb} = 70°C			100 500	μA μA	1
$V_{CE(sus)}$	Collector-emitter sustaining voltage	I_C = 100mA	V_i = 0.4V	50			V	2
→ → → $V_{CE(sat)}$	Collector-emitter saturation voltage	I_C = 500mA I_C = 750mA I_C = 1A I_C = 1.5A	I_B = 625μA I_B = 935μA I_B = 1.25mA I_B = 2.25mA			1.1 1.2 1.3 1.5	V V V V	3
$I_{i(on)}$	Input current	for **L7180** for **L7180** for **L7182** for **L7182**	V_i = 2.4V V_i = 3.75V V_i = 5V V_i = 12V	2 4.5 0.9 2.75		4.3 9.6 1.8 5.2	mA mA mA mA	4
$V_{i(on)}$	Input voltage	for **L7180** V_{CE} = 2V V_{CE} = 2V for **L7182** V_{CE} = 2V V_{CE} = 2V	 I_C = 1A I_C = 1.5A I_C = 1A I_C = 1.5A			 2 2.5 6.5 10	 V V V V	5
t_{PLH}	Turn-on delay time	0.5V_i to 0.5V_o				1	μs	
t_{PHL}	Turn-off delay time	0.5V_i to 0.5V_o				1.5	μs	

TEST CIRCUITS

Fig. 1

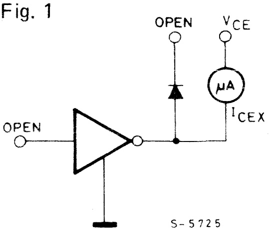

Fig. 2

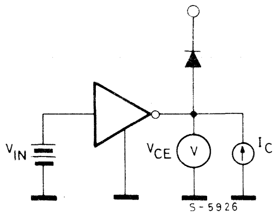

Fig. 3

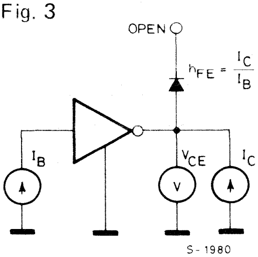

Fig. 4

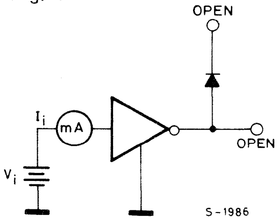

Fig. 5

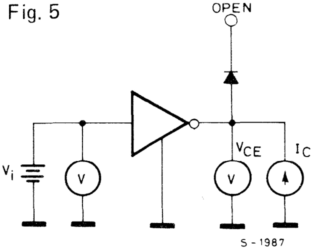

MOUNTING INSTRUCTIONS

The power dissipated in the circuit must be removed by adding an external heatsink.
Thanks to the Multiwatt® package attaching the heatsink is very simple, a screw or a compression spring (clip) being sufficient. Between the heatsink and the package it is better to insert a layer of silicon grease, to optimize the thermal contact; no electrical isolation is needed between the two surfaces.

Fig. 6 - Mounting example

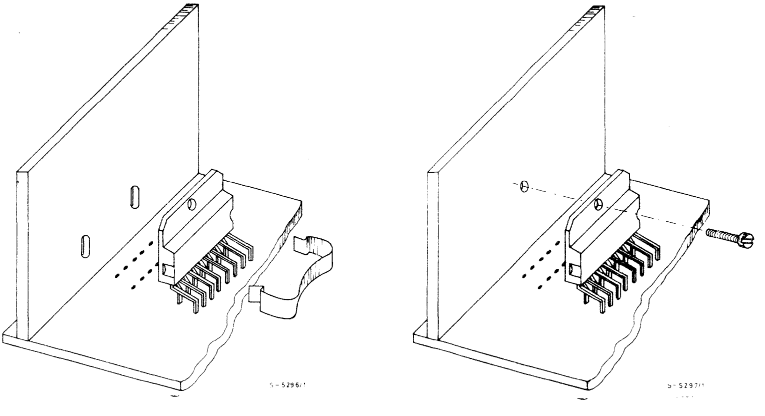

ULN2001A ULN2002A
ULN2003A ULN2004A

LINEAR INTEGRATED CIRCUITS

DARLINGTON ARRAYS

- SEVEN DARLINGTONS PER PACKAGE
- OUTPUT CURRENT 500 mA PER DRIVER (600 mA peak)
- OUTPUT VOLTAGE 50V
- INTEGRAL SUPPRESSION DIODES FOR INDUCTIVE LOADS
- OUTPUTS CAN BE PARALLELED FOR HIGHER CURRENT
- TTL/CMOS/PMOS/DTL COMPATIBLE INPUTS
- INPUTS PINNED OPPOSITE OUTPUTS TO SIMPLIFY LAYOUT

The ULN2001A, ULN2002A, ULN2003A and ULN2004A are high voltage, high current darlington arrays each containing seven open collector darlington pairs with common emitters. Each channel is rated at 500 mA and can withstand peak currents of 600 mA. Suppression diodes are included for inductive load driving and the inputs are pinned opposite the outputs to simplify board layout.

The four versions interface to all common logic families:

ULN 2001A	General purpose, DTL, TTL, PMOS, CMOS
ULN 2002A	14-25V PMOS
ULN 2003A	5V TTL, CMOS
ULN 2004A	6 - 15V CMOS, PMOS

These versatile devices are useful for driving a wide range of loads including solenoids, relays DC motors, LED displays, filament lamps, thermal printheads and high power buffers.
The ULN2001A/2002A/2003A and ULN2004A are supplied in 16 pin plastic DIP packages with a copper leadframe to reduce thermal resistance.

ABSOLUTE MAXIMUM RATINGS

V_o	Output voltage	50	V
V_{in}	Input voltage (for ULN2002A/2003A/2004A)	30	V
I_c	Continuous collector current	500	mA
I_b	Continuous base current	25	mA
P_{tot}	Power dissipation at $T_{amb} = 25°C$ (one Darlington pair)	1	W
	(total package)	2	W
T_{amb}	Operating ambient temperature range	-20 to + 85	°C
T_{stg}	Storage temperature range	-55 to 150	°C

MECHANICAL DATA

Dimensions in mm

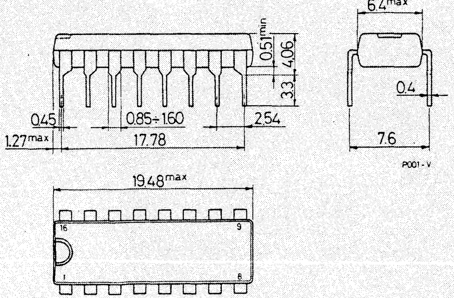

CONNECTION DIAGRAM

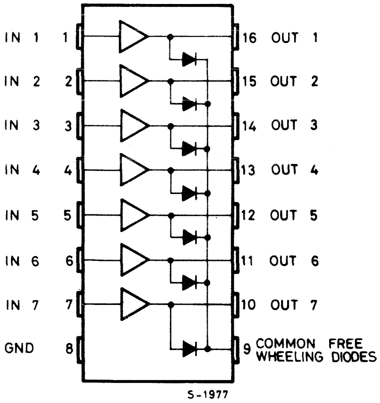

SCHEMATIC DIAGRAM

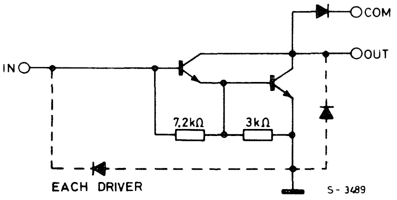

Series ULN-2001A
(each driver)

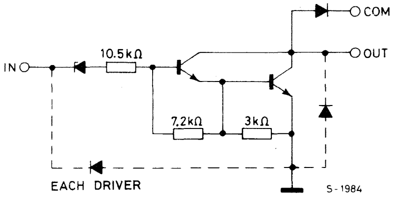

Series ULN-2002A
(each driver)

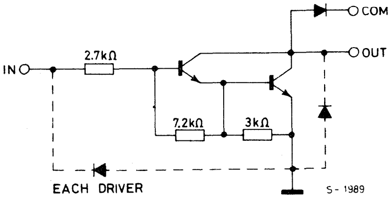

Series ULN-2003A
(each driver)

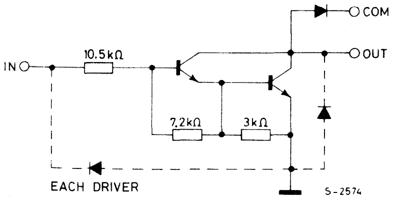

Series ULN-2004A
(each driver)

THERMAL DATA

$R_{th\ j\text{-}amb}$	Thermal resistance junction-ambient	max	70	°C/W

ELECTRICAL CHARACTERISTICS (T_{amb} = 25°C unless otherwise specified)

Parameter		Test conditions		Min.	Typ.	Max.	Unit	Fig.
I_{CEX}	Output leakage current	$V_{CE} = 50V$				50	µA	1a
		$T_{amb} = 70°C$	$V_{CE} = 50V$			100	µA	1a
		$T_{amb} = 70°C$ for **ULN2002A** $V_{CE} = 50V$	$V_i = 6V$			500	µA	1b
		for **ULN2004A** $V_{CE} = 50V$	$V_i = 1V$			500	µA	1b
$V_{CE(sat)}$	Collector-emitter saturation voltage	$I_C = 100mA$	$I_B = 250\ \mu A$		0.9	1.1	V	2
		$I_C = 200mA$	$I_B = 350\ \mu A$		1.1	1.3	V	2
		$I_C = 350mA$	$I_B = 500\ \mu A$		1.3	1.6	V	2
$I_{i(on)}$	Input current	for **ULN2002A**	$V_i = 17V$		0.82	1.25	mA	3
		for **ULN2003A**	$V_i = 3.85V$		0.93	1.35	mA	3
		for **ULN2004A**	$V_i = 5V$		0.35	0.5	mA	3
		$V_i = 12V$			1	1.45	mA	3
$I_{i(off)}$	Input current	$T_{amb} = 70°C$	$I_C = 500\ \mu A$	50	65		µA	4
$V_{i(on)}$	Input voltage	for **ULN2002A** $V_{CE} = 2V$	$I_C = 300\ mA$			13	V	5
		for **ULN2003A** $V_{CE} = 2V$	$I_C = 200\ mA$			2.4	V	5
		$V_{CE} = 2V$	$I_C = 250\ mA$			2.7	V	5
		$V_{CE} = 2V$	$I_C = 300\ mA$			3	V	5
		for **ULN2004A** $V_{CE} = 2V$	$I_C = 125\ mA$			5	V	5
		$V_{CE} = 2V$	$I_C = 200\ mA$			6	V	5
		$V_{CE} = 2V$	$I_C = 275\ mA$			7	V	5
		$V_{CE} = 2V$	$I_C = 350\ mA$			8	V	5
h_{FE}	DC forward current gain	for **ULN2001A** $V_{CE} = 2V$	$I_C = 350\ mA$	1000			–	2
C_i	Input capacitance				15	25	pF	–
t_{PLH}	Turn-on delay time	0.5 V_i to 0.5 V_o			0.25	1	µs	–
t_{PHL}	Turn-off delay time	0.5 V_i to 0.5 V_o			0.25	1	µs	–
I_R	Clamp diode leakage current	$V_R = 50V$				50	µA	6
		$T_{amb} = 70°C$	$V_R = 50V$			100	µA	6
V_F	Clamp diode forward voltage	$I_F = 350\ mA$			1.7	2	V	7

TEST CIRCUITS

Fig. 1a

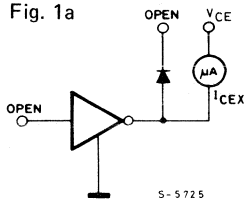

Fig. 1b

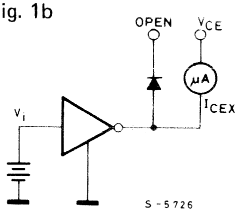

Fig. 2

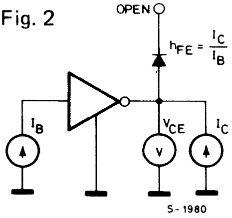

Fig. 3

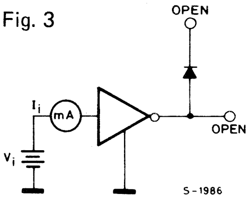

Fig. 4

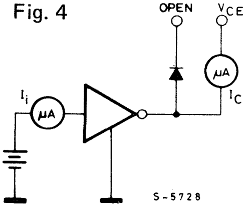

Fig. 5

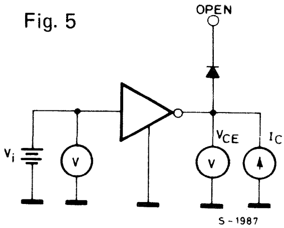

Fig. 6

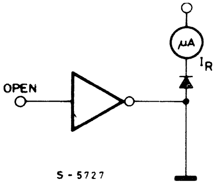

Fig. 7

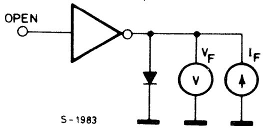

ULN2064B / 2066B
ULN2068B / 2070B
ULN2074B / 2076B

LINEAR INTEGRATED CIRCUITS

50V QUAD DARLINGTON SWITCHES

- FOUR NPN DARLINGTONS
- OUTPUT CURRENT TO 1.5A EACH DARLINGTON
- MINIMUM BREAKDOWN 50V
- SUSTAINING VOLTAGE AT LEAST 35V.
- INTEGRAL SUPPRESSION DIODES (ULN2064B, ULN2066B, ULN2068B AND ULN2070B)
- ISOLATED DARLINGTON PINOUT (ULN2074B, ULN2076B)
- VERSIONS COMPATIBLE WITH ALL POPULAR LOGIC FAMILIES
- 16-pin POWERDIP PACKAGE

Designed to interface logic to a wide variety of high current, high voltage loads, these devices each contain four darlington switches delivering up to 1.5A with a specified minimum breakdown of 50V and a sustaining voltage of 35V measured at 100 mA. The ULN2064B, ULN2066B, ULN2068B and ULN2070B contain integral suppression diodes for inductive loads have common emitters. The ULN2074B and ULN2076B feature isolated darlington pinouts and are intended for applications such as emitter follower configurations. Inputs of the ULN2064B, ULN2068B and ULN2074B are compatible with popular 5V logic families and the ULN2066B and ULN2076B are compatible with 6-15V CMOS and PMOS. Types ULN2068B and ULN2070B include a predriver stage to reduce loading on the control logic. All of these arrays are supplied in a 16-pin powerdip package with the four center pins used to conduct heat to the printed circuit copper.

ABSOLUTE MAXIMUM RATINGS

V_{CEX}	Output voltage	50	V
$V_{CE(sus)}$	Output sustaining voltage	35	V
I_o	Output current	1.75	A
V_i	Input voltage for ULN2066B/70B/74B/76B	30	V
	for ULN2064B/68B	15	V
I_i	Input current	25	mA
V_s	Supply voltage for ULN2068B	10	V
	for ULN2070B	20	V
P_{tot}	Power dissipation: at $T_{pins} = 90°C$	4.3	W
	at $T_{amb} = 70°C$	1	W
T_{amb}	Operating ambient temperature range	-20 to 85	°C
T_{stg}	Storage temperature	-55 to 150	°C

MECHANICAL DATA

Dimensions in mm

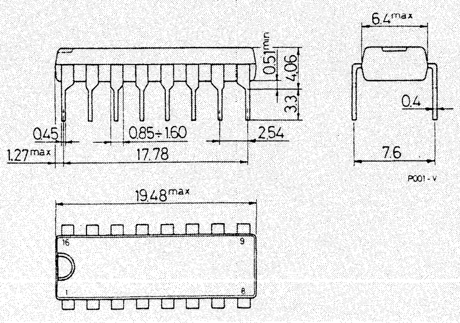

CONNECTION AND SCHEMATIC DIAGRAMS

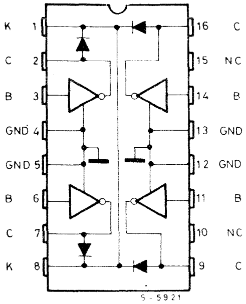

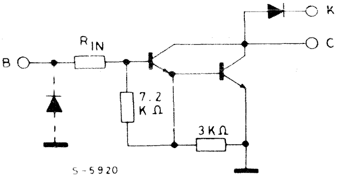

ULN2064B : R_{IN} = 350Ω
ULN2066B : R_{IN} = 3 kΩ

ELECTRICAL CHARACTERISTICS (T_{amb} = 25°C unless otherwise specified)

Parameter		Test conditions	Min.	Typ.	Max.	Unit.	Fig.
I_{CEX}	Output leakage current	for **ULN2064B-ULN2066B** V_{CE} = 50V V_{CE} = 50V T_{amb} = 70°C			 100 500	 μA μA	1
$V_{CE(sus)}$	Collector-emitter sustaining voltage	for **ULN2064B-ULN2066B** I_C = 100mA V_i = 0.4V	35			V	2
$V_{CE(sat)}$	Collector-emitter saturation voltage	I_C = 500mA I_B = 625μA I_C = 750mA I_B = 935μA I_C = 1A I_B = 1.25mA I_C = 1.25A I_B = 2mA			1.1 1.2 1.3 1.4	V V V V	3
$I_{i(on)}$	Input current	for **ULN2064B** V_i = 2.4V for **ULN2064B** V_i = 3.75V for **ULN2066B** V_i = 5V for **ULN2066B** V_i = 12V	1.4 3.3 0.6 1.7		4.3 9.6 1.8 5.2	mA mA mA mA	4
$V_{i(on)}$	Input voltage	for **ULN2064B** V_{CE} = 2V I_C = 1A V_{CE} = 2V I_C = 1.5A for **ULN2066B** V_{CE} = 2V I_C = 1A V_{CE} = 2V I_C = 1.5A			 2 2.5 6.5 10	 V V V V	5
t_{PLH}	Turn-on delay time	$0.5V_i$ to $0.5V_o$			1	μs	
t_{PHL}	Turn-off delay time	$0.5V_i$ to $0.5V_o$			1.5	μs	
I_R	Clamp diode leakage current	for **ULN2064B-ULN2066B** V_R = 80V V_R = 80V T_{amb} = 70°C			 50 100	 μA μA	6
V_F	Clamp diode forward voltage	I_F = 1A I_F = 1.5A			1.75 2	V V	7

CONNECTION AND SCHEMATIC DIAGRAMS

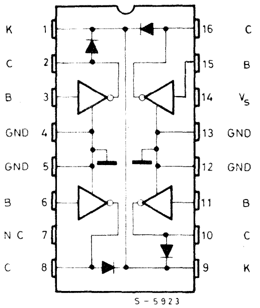

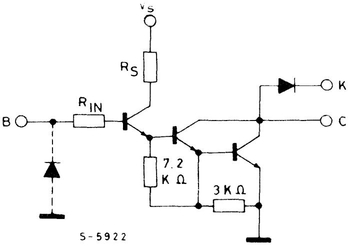

ULN2068B : R_{IN} = 2.5 kΩ R_s = 900Ω
ULN2070B : R_{IN} = 11.6 kΩ R_s = 3.4 KHΩ

ELECTRICAL CHARACTERISTICS (V_s = 5V for ULN2068B, V_s = 12V for ULN2070B, T_{amb}= 25°C unless otherwise specified)

Parameter		Test conditions	Min.	Typ.	Max.	Unit.	Fig.
I_{CEX}	Output leakage current	for **ULN2068B-ULN2070B** V_{CE} = 50V V_{CE} = 50V T_{amb} = 70°C			 100 500	 μA μA	1
$V_{CE(sus)}$	Collector-emitter sustaining voltage	for **ULN2068B-ULN2070B** I_C = 100mA V_i = 0.4V	35			V	2
$V_{CE(sat)}$	Collector-emitter saturation voltage	for **ULN2068B** I_C = 500 mA V_i = 2.75V I_C = 750mA V_i = 2.75V I_C = 1A V_i = 2.75V I_C = 1.25A V_i = 2.75V for **ULN2070B** I_C = 500mA V_i = 5V I_C = 750mA V_i = 5V I_C = 1A V_i = 5V I_C = 1.25A V_i = 5V			 1.1 1.2 1.3 1.4 1.1 1.2 1.3 1.4	 V V V V V V V V	2
$I_{i(on)}$	Input current	for **ULN2068B** V_i = 2.75V for **ULN2068B** V_i = 3.75V for **ULN2070B** V_i = 5V for **ULN2070B** V_i = 12V			550 1000 400 1250	μA μA μA μA	4
$V_{i(on)}$	Input voltage	V_{CE} = 2V I_C = 1.5A for **ULN2068B** for **ULN2070B**			 2.75 5	 V V	5
I_s	Supply current	for **ULN2068B** I_C = 500mA V_i = 2.75V for **ULN2070B** I_C = 500mA V_i = 5V			 6 4.5	 mA mA	8
t_{PLH}	Turn-on delay time	0.5V_i to 0.5V_o			1	μs	
t_{PHL}	Turn-off delay time	0.5V_i to 0.5V_o I_C = 1.25A			1.5	μs	
I_R	Clamp diode leakage current	for **ULN2068B-ULN2070B** V_R = 50V V_R = 50V T_{amb} = 70°C			 50 100	 μA μA	6
V_F	Clamp diode forward voltage	I_F = 1A I_F = 1.5A			1.75 2	V V	7

CONNECTION AND SCHEMATIC DIAGRAMS

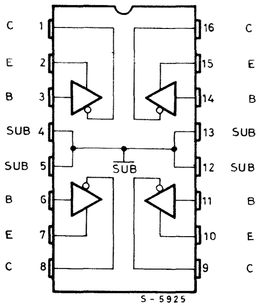

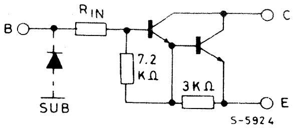

ULN2074B : $R_{IN} = 350\Omega$
ULN2076B : $R_{IN} = 3\ k\Omega$

ELECTRICAL CHARACTERISTICS ($T_{amb} = 25°C$ unless otherwise specified)

Parameter	Test conditions	Min.	Typ.	Max.	Unit.	Fig.
I_{CEX} Output leakage current	for **ULN2074B-ULN2076B** $V_{CE} = 50V$ $V_{CE} = 50V$ $T_{amb} = 70°C$			 100 500	 μA μA	1
$V_{CE(sus)}$ Collector-emitter sustaining voltage	for **ULN2074B-ULN2076B** $I_C = 100mA$ $V_i = 0.4V$	35			V	2
$V_{CE(sat)}$ Collector-emitter saturation voltage	$I_C = 500mA$ $I_B = 625\mu A$ $I_C = 750mA$ $I_B = 935\mu A$ $I_C = 1A$ $I_B = 1.25mA$ $I_C = 1.25A$ $I_B = 2mA$			1.1 1.2 1.3 1.4	V V V V	3
$I_{i(on)}$ Input current	for **ULN2074B** $V_i = 2.4V$ for **ULN2074B** $V_i = 3.75V$ for **ULN2076B** $V_i = 5V$ for **ULN2076B** $V_i = 12V$	1.4 3.3 0.6 1.7		4.3 9.6 1.8 5.2	mA mA mA mA	4
$V_{i(on)}$ Input voltage	for **ULN2074B** $V_{CE} = 2V$ $I_C = 1A$ $V_{CE} = 2V$ $I_C = 1.5A$ for **ULN2076B** $V_{CE} = 2V$ $I_C = 1A$ $V_{CE} = 2V$ $I_C = 1.5A$			 2 2.5 6.5 10	 V V V V	5
t_{PLH} Turn-on delay time	$0.5V_i$ to $0.5V_o$			1	μs	
t_{PHL} Turn-off delay time	$0.5V_i$ to $0.5V_o$			1.5	μs	

TEST CIRCUITS

Fig. 1

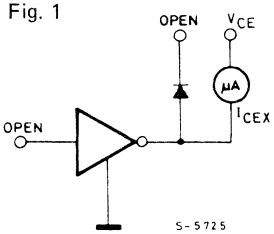

Fig. 2

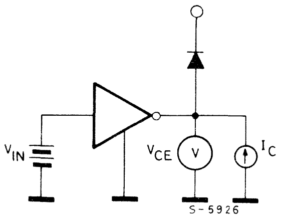

Fig. 3

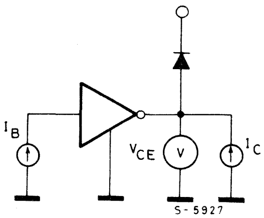

Fig. 4

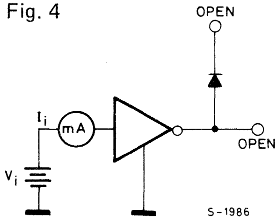

Fig. 5

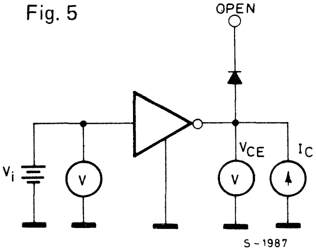

Fig. 6

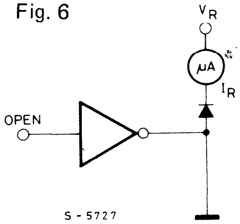

Fig. 7

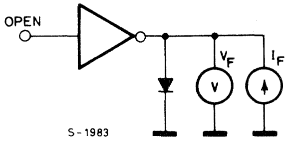

Fig. 8

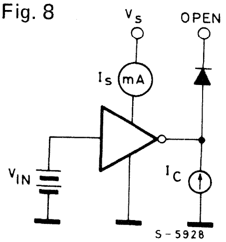

Fig. 9 - Input current as a function of input voltage

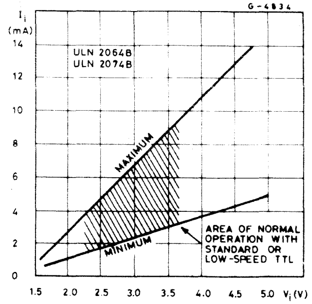

Fig. 10 - Input current as a function of input voltage

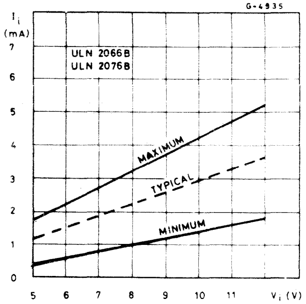

Fig. 11 - Collector current as a function of input current

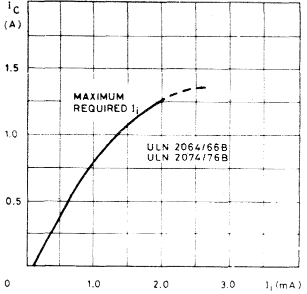

TYPICAL APPLICATIONS

Fig. 12 - Common-anode LED drivers

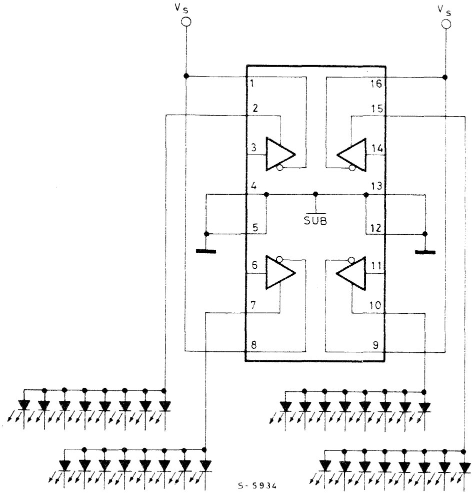

Fig. 13 - Common-cathode LED drivers

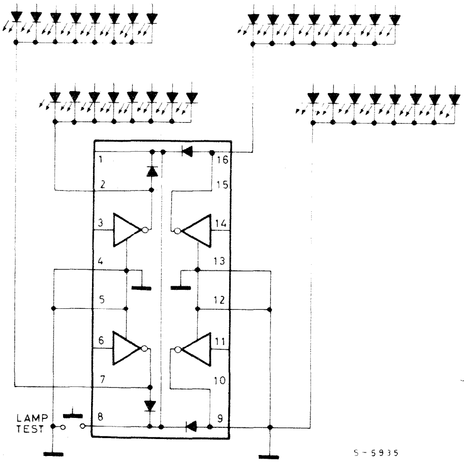

MOUNTING INSTRUCTIONS

The $R_{th\,j\text{-}amb}$ can be reduced by soldering the GND pins to a suitable copper area of the printed circuit board (Fig. 14) or to an external heatsink (Fig. 15).
The diagram of figure 16 shows the maximum dissipable power P_{tot} and the $R_{th\,j\text{-}amb}$ as a function of the side "ℓ" of two equal square copper areas having a thickness of 35μ (1.4 mils).
During soldering the pins temperature must not exceed 260°C and the soldering time must not be longer than 12 seconds.
The external heatsink or printed circuit copper area must be connected to electrical ground.

Fig. 14 - Example of P.C. board copper area which is used as heatsink.

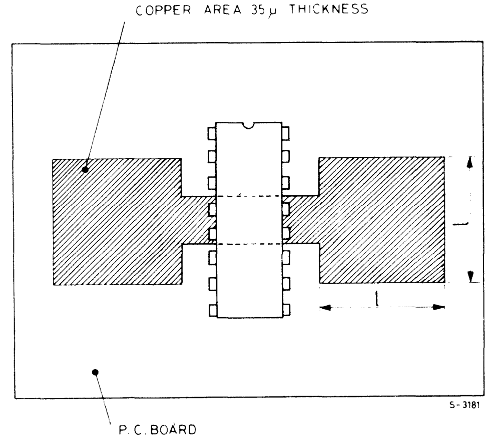

Fig. 15 - External heatsink mouting example

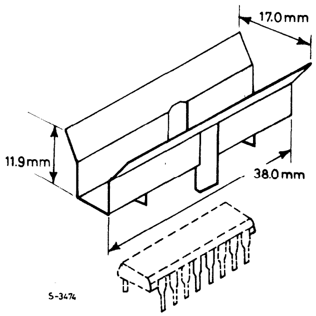

Fig. 16 - Maximum dissipable power and junction to ambient thermal resistance vs. side "ℓ"

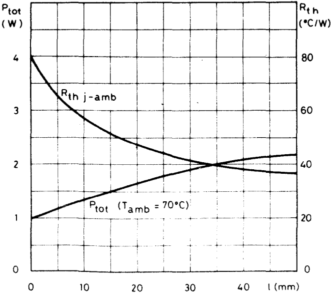

Fig. 17 - Maximum allowable power dissipation vs. ambient temperature

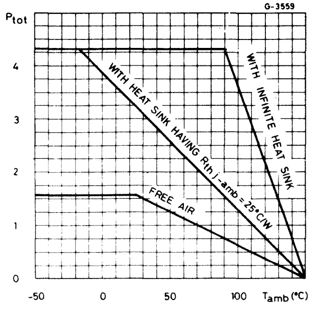

ULN2065B/2067B
ULN2069B/2071B
ULN2075B/2077B

LINEAR INTEGRATED CIRCUITS

80V QUAD DARLINGTON SWITCHES

- FOUR NPN DARLINGTONS
- OUTPUT CURRENT TO 1.5A EACH DARLINGTON
- MINIMUM BREAKDOWN 80V
- SUSTAINING VOLTAGE AT LEAST 50V
- INTEGRAL SUPPRESSION DIODES (ULN2065B, ULN2067B, ULN2069B AND ULN2071B)
- ISOLATED DARLINGTON PINOUT (ULN2075B AND ULN2077B)
- VERSIONS COMPATIBLE WITH ALL POPULAR LOGIC FAMILIES
- 16-pin POWERDIP PACKAGE

Designed to interface logic to a wide variety of high current, high voltage loads, these devices each contain four darlington switches delivering up to 1.5A with a specified minimum breakdown of 80V and a sustaining voltage of 50V. The ULN2065B, ULN2067B, ULN2069B and ULN2071B contain integral suppression diodes for inductive loads and have common emitters; the ULN2075B and ULN2077B feature isolated darlington pinouts and are intended for applications such as emitter follower configurations. Inputs of the ULN2065B, ULN2069B and ULN2075B are compatible with popular 5V logic families and the ULN2067B, ULN2071B and ULN2077B are compatible with 6-15V CMOS and PMOS. The ULN2069B and ULN2071B include a predriver stage to provide extragain, reducing the load on control logic. All of these arrays are supplied in a 16-pin powerdip, package with the four center pins used to conduct heat to the PCB copper.

ABSOLUTE MAXIMUM RATINGS

V_{CEX}	Output voltage	80	V
$V_{CE(sus)}$	Output sustaining voltage	50	V
I_o	Output current	1.75	A
V_i	Input voltage for ULN2075B - 2077B	60	V
	for ULN2067B - 2071B	30	V
	for ULN2065B - 2069B	15	V
I_i	Input current	25	mA
V_s	Supply voltage for ULN2069B	10	V
	for ULN2071B	20	V
P_{tot}	Power dissipation: at $T_{pins} = 90°C$	4.3	W
	at $T_{amb} = 70°C$	1	W
T_{amb}	Operating ambient temperature range	-20 to 85	°C
T_{stg}	Storage temperature	-55 to 150	°C

MECHANICAL DATA

Dimensions in mm

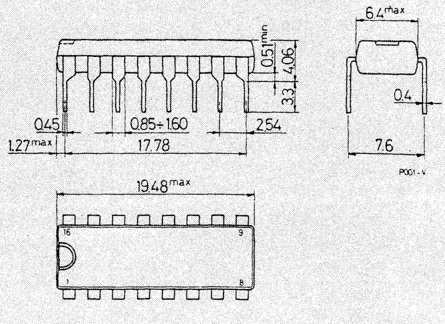

ULN2065B / 2067B
ULN2069B / 2071B
ULN2075B / 2077B

CONNECTION AND SCHEMATIC DIAGRAMS

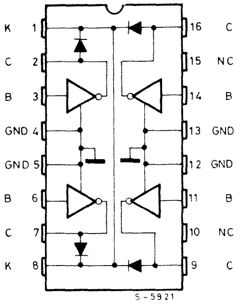

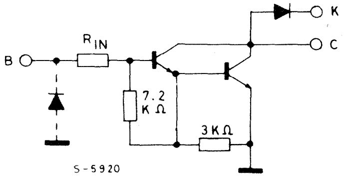

ULN2065B : R_{IN} = 350Ω
ULN2067B : R_{IN} = 3 kΩ

ELECTRICAL CHARACTERISTICS (T$_{amb}$ = 25°C unless otherwise specified)

Parameter		Test conditions	Min.	Typ.	Max.	Unit.	Fig.
I_{CEX}	Output leakage current	for **ULN2065B-ULN2067B** V_{CE} = 80V V_{CE} = 80V T_{amb} = 70°C			 100 500	 µA µA	1
$V_{CE(sus)}$	Collector-emitter sustaining voltage	for **ULN2065B-ULN2067B** I_C = 100mA V_i = 0.4V	 50			 V	2
$V_{CE(sat)}$	Collector-emitter saturation voltage	I_C = 500mA I_B = 625µA I_C = 750mA I_B = 935µA I_C = 1A I_B = 1.25mA I_C = 1.25A I_B = 2mA for **ULN2065B-ULN2067B** I_C = 1.5A I_B = 2.25mA			1.1 1.2 1.3 1.4 1.5	V V V V V	3
$I_{i(on)}$	Input current	for **ULN2065B** V_i = 2.4V for **ULN2065B** V_i = 3.75V for **ULN2067B** V_i = 5V for **ULN2067B** V_i = 12V	1.4 3.3 0.6 1.7		4.3 9.6 1.8 5.2	mA mA mA mA	4
$V_{i(on)}$	Input voltage	for **ULN2065B** V_{CE} = 2V I_C = 1A V_{CE} = 2V I_C = 1.5A for **ULN2067B** V_{CE} = 2V I_C = 1A V_{CE} = 2V I_C = 1.5A			 2 2.5 6.5 10	 V V V V	5
t_{PLH}	Turn-on delay time	0.5V_i to 0.5V_o			1	µs	
t_{PHL}	Turn-off delay time	0.5V_i to 0.5V_o			1.5	µs	
I_R	Clamp diode leakage current	for **ULN2065B-ULN2067B** V_R = 80V V_R = 80V T_{amb} = 70°C			 50 100	 µA µA	6
V_F	Clamp diode forward voltage	I_F = 1A I_F = 1.5A			1.75 2	V V	7

CONNECTION AND SCHEMATIC DIAGRAMS

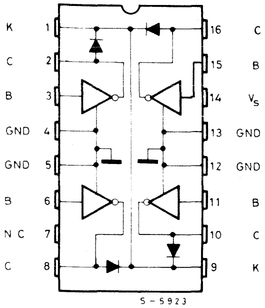

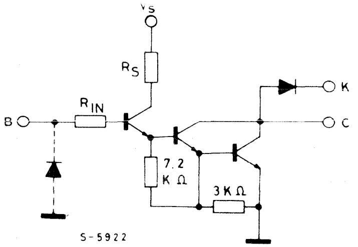

ULN2069B : R_{IN} = 2.5 kΩ, R_s = 900Ω
ULN2071B : R_{IN} = 11.6 kΩ, R_s = 3.4 kΩ

ELECTRICAL CHARACTERISTICS (V_s = 5V for ULN2069B, V_s = 12V for ULN2071B, T_{amb} = 25°C unless otherwise specified)

Parameter		Test conditions	Min.	Typ.	Max.	Unit.	Fig.
I_{CEX}	Output leakage current	for **ULN2069B-ULN2071B** V_{CE} = 80V V_{CE} = 80V T_{amb} = 70°C			100 500	μA μA	1
$V_{CE(sus)}$	Collector-emitter sustaining voltage	for **ULN2069B-ULN2071B** I_C = 100mA V_i = 0.4V	50			V	2
$V_{CE(sat)}$	Collector-emitter saturation voltage	for **ULN2069B** I_C = 500 mA V_i = 2.75V I_C = 750mA V_i = 2.75V I_C = 1A V_i = 2.75V I_C = 1.25A V_i = 2.75V I_C = 1.5A V_i = 2.75V for **ULN2071B** I_C = 500mA V_i = 5V I_C = 750mA V_i = 5V I_C = 1A V_i = 5V I_C = 1.25A V_i = 5V I_C = 1.5A V_i = 5V			1.1 1.2 1.3 1.4 1.5 1.1 1.2 1.3 1.4 1.5	V V V V V V V V V V	2
$I_{i(on)}$	Input current	for **ULN2069B** V_i = 2.75V for **ULN2069B** V_i = 3.75V for **ULN2071B** V_i = 5V for **ULN2071B** V_i = 12V			550 1000 400 1250	μA μA μA μA	4
$V_{i(on)}$	Input voltage	V_{CE} = 2V I_C = 1.5A for **ULN2069B** for **ULN2071B**			2.75 5	V	5
I_s	Supply current	for **ULN2069B** I_C = 500mA V_i = 2.75V for **ULN2071B** I_C = 500mA V_i = 5V			6 4.5	mA mA	8
t_{PLH}	Turn-on delay time	$0.5V_i$ to $0.5V_o$			1	μs	
t_{PHL}	Turn-off delay time	$0.5V_i$ to $0.5V_o$ I_C = 1.25A			1.5	μs	
I_R	Clamp diode leakage current	for **ULN2069B-ULN2071B** V_R = 80V V_R = 80V T_{amb} = 70°C			50 100	μA μA	6
V_F	Clamp diode forward voltage	I_F = 1A I_F = 1.5A			1.75 2	V V	7

CONNECTION AND SCHEMATIC DIAGRAMS

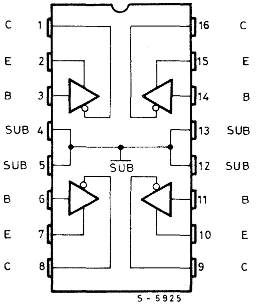

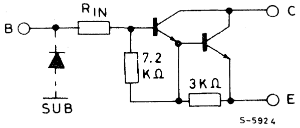

ULN2075B : R_{IN} = 350Ω
ULN2077B : R_{IN} = 3 kΩ

ELECTRICAL CHARACTERISTICS (T_{amb} = 25°C unless otherwise specified)

Parameter		Test conditions	Min.	Typ.	Max.	Unit.	Fig.
I_{CEX}	Output leakage current	for **ULN2075B-ULN2077B** V_{CE} = 80V V_{CE} = 80V T_{amb} = 70°C			 100 500	 μA μA	1
$V_{CE(sus)}$	Collector-emitter sustaining voltage	for **ULN2075B-ULN2077B** I_C = 100mA V_i = 0.4V	 50			 V	2
$V_{CE(sat)}$	Collector-emitter saturation voltage	I_C = 500mA I_B = 625μA I_C = 750mA I_B = 935μA I_C = 1A I_B = 1.25mA I_C = 1.25A I_B = 2mA for **ULN2075B-ULN2077B** I_C = 1.5A I_B = 2.25mA			1.1 1.2 1.3 1.4 1.5	V V V V V	3
$I_{i(on)}$	Input current	for **ULN2075B** V_i = 2.4V for **ULN2075B** V_i = 3.75V for **ULN2077B** V_i = 5V for **ULN2077B** V_i = 12V	1.4 3.3 0.6 1.7		4.3 9.6 1.8 5.2	mA mA mA mA	4
$V_{i(on)}$	Input voltage	for **ULN2075B** V_{CE} = 2V I_C = 1A V_{CE} = 2V I_C = 1.5A for **ULN2077B** V_{CE} = 2V I_C = 1A V_{CE} = 2V I_C = 1.5A			 2 2.5 6.5 10	 V V V V	5
t_{PLH}	Turn-on delay time	$0.5V_i$ to $0.5V_o$			1	μs	
t_{PHL}	Turn-off delay time	$0.5V_i$ to $0.5V_o$			1.5	μs	

TEST CIRCUITS

Fig. 1

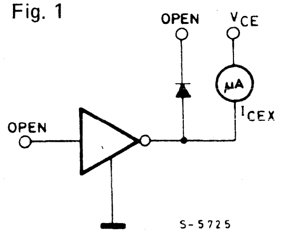

Fig. 2

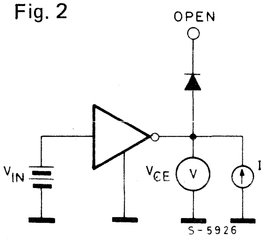

Fig. 3

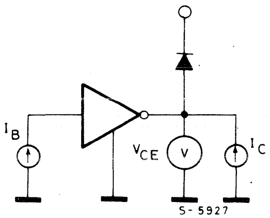

Fig. 4

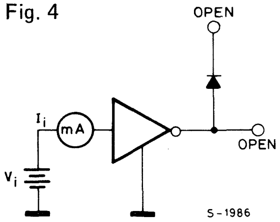

Fig. 5

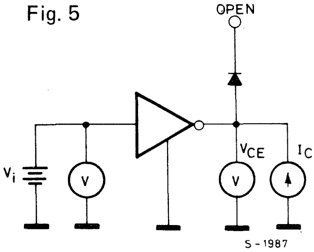

Fig. 6

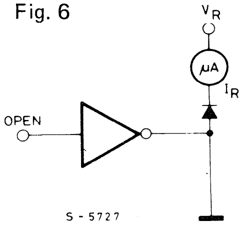

Fig. 7

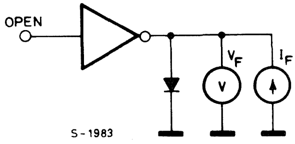

Fig. 8

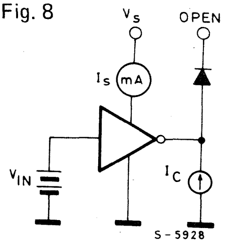

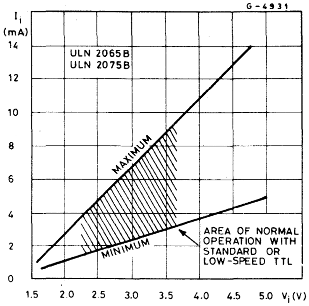

Fig. 9 - Input current as a function of input voltage

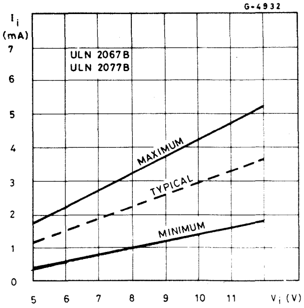

Fig. 10 - Input current as a function of input voltage

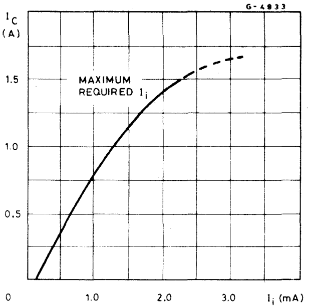

Fig. 11 - Collector current as a function of input current

MOUNTING INSTRUCTIONS

The $R_{th\ j\text{-}amb}$ can be reduced by soldering the GND pins to a suitable copper area of the printed circuit board (Fig. 12) or to an external heatsink (Fig. 13).
The diagram of figure 14 shows the maximum dissipable power P_{tot} and the $R_{th\ j\text{-}amb}$ as a function of the side "ℓ" of two equal square copper areas having a thickness of 35μ (1.4 mils).
During soldering the pins temperature must not exceed 260°C and the soldering time must not be longer than 12 seconds.
The external heatsink or printed circuit copper area must be connected to electrical ground.

Fig. 12 - Example of P.C. board copper area which is used as heatsink.

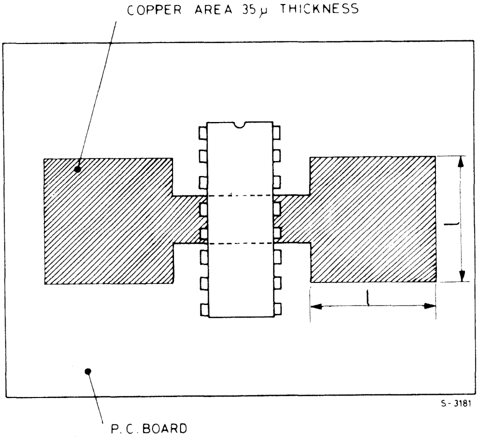

Fig.13 - External heatsink mounting example

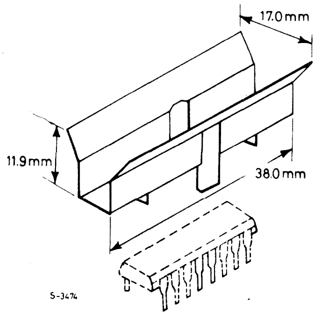

Fig. 14 - Maximum dissipable power and junction to ambient thermal resistance vs. side "ℓ"

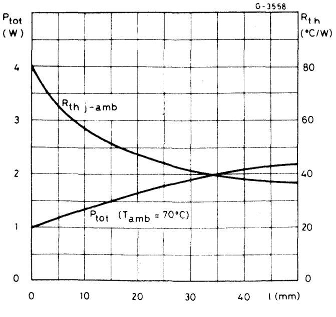

Fig. 15 - Maximum allowable power dissipation vs. ambient temperature

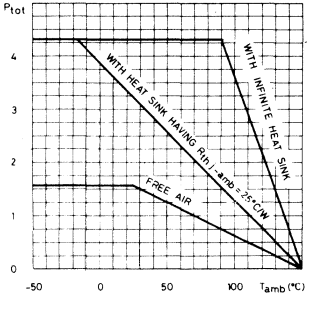

LINEAR INTEGRATED CIRCUITS

SGS

ULN2801A/2802A
ULN2803A/2804A
ULN2805A

DARLINGTON ARRAYS

- EIGHT DARLINGTONS WITH COMMON EMITTERS
- OUTPUT CURRENT TO 500 mA (600 mA peak)
- OUTPUT VOLTAGE TO 50V
- INTEGRAL SUPPRESSION DIODES FOR INDUCTIVE LOADS
- VERSIONS FOR ALL POPULAR LOGIC FAMILIES
- OUTPUTS CAN BE PARALLELED OR HIGHER CURRENT
- INPUTS PINNED OPPOSITE OUTPUTS TO SIMPLIFY BOARD LAYOUT

The ULN2801A - ULN2805A each contain eight darlington transistors with common emitters and integral suppression diodes for inductive loads. Each darlington features a peak load current rating of 600 mA (500 mA continuous) and can withstand at least 50V in the off state. Outputs may be paralleled for higher current capability.

Five versions are available to simplify interfacing to standard logic families: the ULN2801A is designed for general purpose applications with a current limit resistor;the ULN2802A has a 10.5 KΩ input resistor and zener for 14-25V PMOS; the ULN2803A has a 2.7 KΩ input resistor for 5V TTL and CMOS; the ULN2804A has a 10.5 KΩ input resistor for 6-15V CMOS and the ULN2805A is designed to sink a minimum of 350 mA for standard and Schottky TTL where higher output current is required.

All types are supplied in an 18-lead plastic DIP with a copper lead frome and feature the convenient input-opposite-output pinout to simplify board layout.

ABSOLUTE MAXIMUM RATINGS

V_o	Output voltage	50	V
V_i	Input voltage for ULN 2802A, 2803A, 2804A	30	V
	for ULN 2805A	15	V
I_C	Continuous collector current	500	mA
I_B	Continuous base current	25	mA
P_{tot}	Power dissipation (one Darlington pair)	1.0	W
	(total package)	2.25	W
T_{amb}	Operating ambient temperature range	-20 to 85	°C
T_{stg}	Storage temperature range	-55 to 150	°C

MECHANICAL DATA

Dimensions in mm

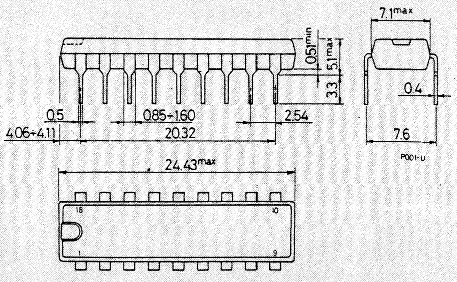

CONNECTION DIAGRAM

(top view)

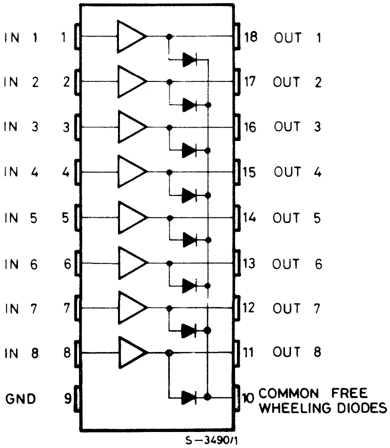

SCHEMATIC DIAGRAMS

For ULN 2801A (each driver for PMOS-CMOS)

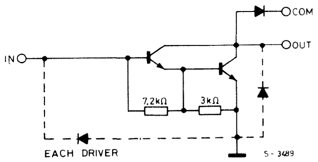

For ULN 2802A (each driver for 14-15V PMOS)

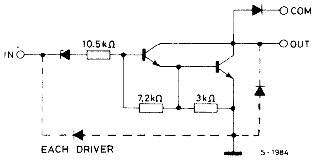

For ULN 2803A (each driver for 5V, TTL/CMOS)

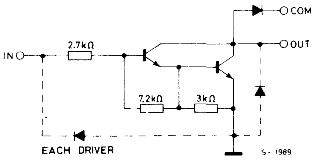

For ULN 2804A (each driver for 6-15V CMOS/PMOS)

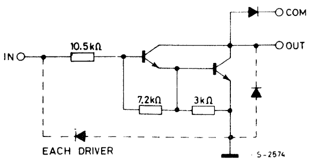

For ULN 2805A (each driver for high out TTL)

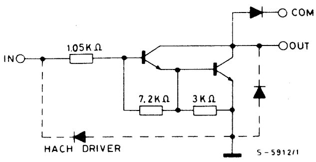

THERMAL DATA

$R_{th\ j\text{-}amb}$	Thermal resistance junction-ambient	max	55	°C/W

ELECTRICAL CHARACTERISTICS (T_{amb}= 25°C unless otherwise specified)

Parameter		Test conditions	Min.	Typ.	Max.	Unit	Fig.
I_{CEX}	Output leakage current	V_{CE}= 50V			50	µA	1a
		T_{amb}= 70°C V_{CE}= 50V			100	µA	1a
		T_{amb}= 70°C					
		for **ULN 2802A**					
		V_{CE}= 50V V_i = 6V			500	µA	1b
		for **ULN 2804A**					
		V_{CE}= 50V V_i = 1V			500	µA	1b
$V_{CE(sat)}$	Collector-emitter saturation voltage	I_C = 100 mA I_B = 250 µA		0.9	1.1	V	2
		I_C = 200 mA I_B = 350 µA		1.1	1.3	V	
		I_C = 350 mA I_B = 500 µA		1.3	1.6	V	
$I_{i(on)}$	Input current	for **ULN 2802A** V_i = 17V		0.82	1.25	mA	3
		for **ULN 2803A** V_i = 3.85V		0.93	1.35	mA	
		for **ULN 2804A** V_i = 5V		0.35	0.5	mA	
		V_i = 12V		1	1.45	mA	
		for **ULN 2805A** V_i = 3V		1.5	2.4	mA	
$I_{i(off)}$	Input current	T_{amb}= 70°C I_C = 500 µA	50	65		µA	4
$V_{i(on)}$	Input voltage	for **ULN 2802A**					5
		V_{CE}= 2V I_C = 300 mA			13	V	
		for **ULN 2803A**					
		V_{CE}= 2V I_C = 200 mA			2.4	V	
		V_{CE}= 2V I_C = 250 mA			2.7	V	
		V_{CE}= 2V I_C = 300 mA			3	V	
		for **ULN 2804A**					
		V_{CE}= 2V I_C = 125 mA			5	V	
		V_{CE}= 2V I_C = 200 mA			6	V	
		V_{CE}= 2V I_C = 275 mA			7	V	
		V_{CE}= 2V I_C = 350 mA			8	V	
		for **ULN 2805A**					
		V_{CE}= 2V I_C = 350 mA			2.4	V	
h_{FE}	DC forward current gain	for **ULN 2801A**					
		V_{CE}= 2V I_C = 350 mA	1000			–	2
C_i	Input capacitance			15	25	pF	–
t_{PLH}	Turn-on delay time	0.5 V_i to 0.5 V_o		0.25	1	µs	–
t_{PHL}	Turn-off delay time	0.5 V_i to 0.5 V_o		0.25	1	µs	–
I_R	Clamp diode leakage current	V_R = 50V			50	µA	6
		T_{amb}= 70°C V_R = 50V			100	µA	
V_F	Clamp diode forward voltage	I_F = 350 mA		1.7	2	V	7

TEST CIRCUITS

Fig. 1a

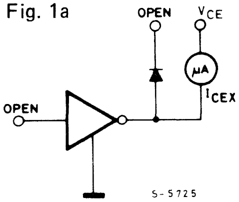

Fig. 1b

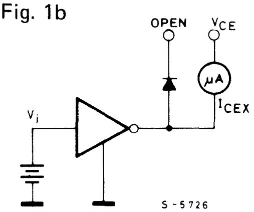

Fig. 2

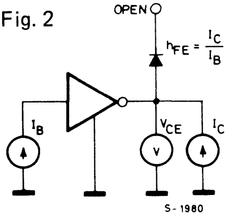

Fig. 3

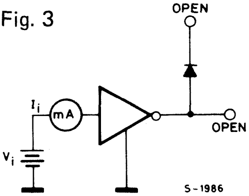

Fig. 4

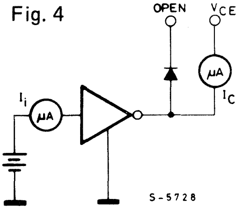

Fig. 5

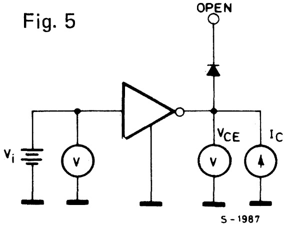

Fig. 6

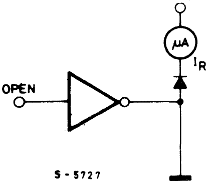

Fig. 7

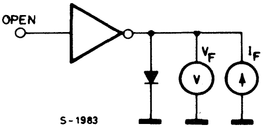

Fig. 8 - Collector current as a function of saturation voltage

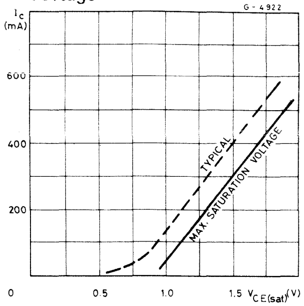

Fig. 9 - Collector current as a function of input current

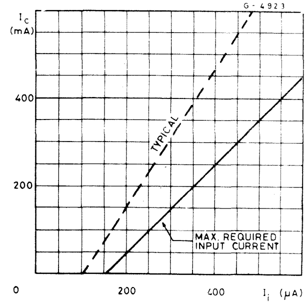

Fig. 10 - Allowable average power dissipation as a function of ambient temperature

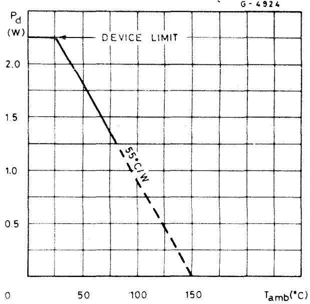

Fig. 11 - Peak collector current as a function of duty cycle

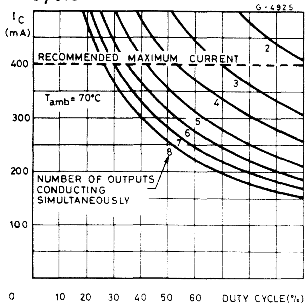

Fig. 12 - Peak collector current as a function of duty cycle

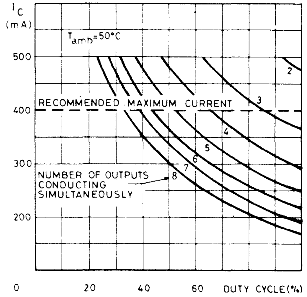

Fig. 13 - Input current as a function of input voltage (for ULN 2802A)

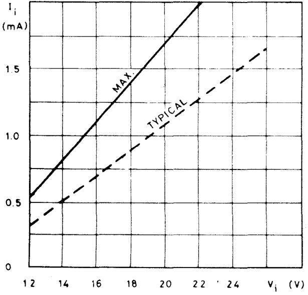

Fig. 14 - Input current as a function of input voltage (for ULN 2804A)

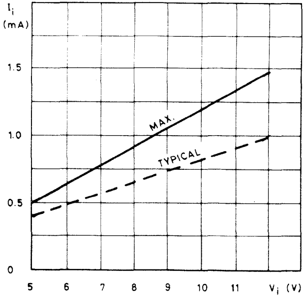

Fig. 15 - Input current as a function of input voltage (for ULN 2803A)

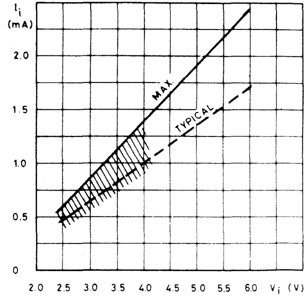

Fig. 16 - Input current as a function of input voltage (for ULN 2805A)

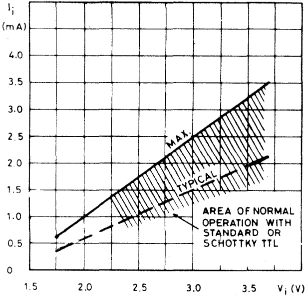

OTHER BIPOLAR CIRCUITS

Automotive Circuits

IGNITION CONTROL

TYPE	FUNCTION	FEATURES	PACKAGE
L482	Electronic ignition controller (Hall-effect pickup)	For Hall-effect pickup breakerless ignition systems. Drives an external darlington to provide regulated current in ignition coil with low power dissipation. Can also be used as dwell control section and driver stage in microprocessor-controlled systems. Includes protection against permanent conduction, overvoltage and dump transients to 100V.	16-pin DIP and Microwatt (16-pin power micropackage)
L497	Electronic ignition controller (Hall-effect pickup)	For Hall-effect pickup breakerless ignition systems. Drives an external darlington to provide regulated current in the ignition coil with low power dissipation. Can also be used as dwell control section and driver stage in microprocessor-controlled systems. Includes protection against permanent conduction, overvoltages and dump transients to 100V. Built in timer for calibrated control of dwell angle when 90% of required coil current not reached.	16-pin DIP and Microwatt (16-pin power micropackage)
L484	Electronic ignition controller (Magnetic pickup)	For breakerless ignition systems with magnetic pickup. Drives an external darlington to provide regulated current with low dissipation. Features zero crossing detection plus protection against overvoltages and dump transients to 100V. Pickup signal referred to ground. Circuit is insensitive to variations in pickup waveform.	16-pin DIP and Microwatt (16-pin power micropackage)

FUEL INJECTION

L583	Injector solenoid controller	Connected directly to control micro and driving two external darlingtons, provides high current peak to open injector then lower holding current to keep it open. Includes switchmode regulation and dump protection up to 80V.	Powerdip 12 + 2 + 2
L483	Injector solenoid driver	Connected directly to control micro, provides high current peak (4A) to open injector then lower holding current (1A) to keep it open. Includes dump protection up to 80V.	Pentawatt®

Automotive Circuits

FLASHER CONTROL

TYPE	FUNCTION	FEATURES	PACKAGE
L486	Direction indicator driver	Drives flashing direction indicators in automobiles. Faults indicated by automatic speedup of flash rate. Features high current capability (1A) and dump protection to 80V.	Minidip

AUTOMOTIVE VOLTAGE REGULATORS

L487	Very low drop 5V regulator with reset	– Output current of 500 mA with 0.6V drop. – Includes reset function and ±80V dump protection.	Pentawatt®
L2600 series	Low drop fixed regulators (5, 8.5 & 10V)	– Output current of 500mA. – Include ± 100V dump protection.	Versawatt
L4700 series	Very low drop fixed regulators (5, 8.5 & 10V)	– Output current 500 mA with 0.5V drop. – Include ± 80V dump protection.	Versawatt
L4800 series	Very low drop fixed regulators (5, 8.5 & 10V)	– Output current of 400 mA with 0.4V drop. – Include ± 60V dump protection plus foldback current limiting.	Versawatt
LM 2930A	Very low drop 5V regulator	– Output current 400 mA with 0.4V drop. – Includes ± 40V dump protection and foldback current limiting.	Versawatt
LM 2931A	Very low drop 5V regulator	– Output current 400 mA with 0.4V drop. – Includes ± 60V dump protection and foldback current limiting.	Versawatt

Telecom Circuits

TELEPHONE SPEECH CIRCUITS

TYPE	FUNCTION	FEATURES	PACKAGE
LS 285	Speech circuit	Replaces hybrid circuit (2/4 wire interface) in telephones. Provides automatic gain control and works typically with dynamic transducers.	14-pin DIP
LS 288	Programmable speech circuit	Telephone speech circuit with programmable gains, automatic gain control and fixed gain operation. Suitable for both piezoceramic and dynamic transducers.	16-pin DIP
LS 156	Speech circuit with MF tone interface	Telephone speech circuit incorporating Mf interface. Automatic gain control for voice signals. Designed for piezoceramic transducers. Automatically adjusts balancing impedance to match line.	16-pin DIP
LS 356	Speech circuit with MF tone interface	Telephone speech circuit incorporating MF interface. Features automatic gain control for voice signal and fixed gain mode. Used typically with dynamic transducers but a small loudspeakers can be used for receiver thanks to high current available at output.	16-pin DIP
LS 656	Speech circuit with MF tone interface and low drop	Same as LS356 plus low voltage drop.	16-pin DIP
LS 348	Fully programmable speech circuit	Telephone speech circuit with adjustable gains, AGC current thereshold and AGC range. Can work with both dynamic and piezoceramic transducers and the voltage drop is particularly low. Can be set to standby state, consuming very little current but still matching AC & DC impedances to line.	20-pin DIP
LS 388	Low consumption speech circuit	Telephone speech circuit with programmable gains, automatic gain control and fixed gain operation. Both send and receive gains can be set to very high levels. Special features include low voltage drop and very low current consumption.	16-pin DIP

OTHER TELECOM CIRCUITS

TYPE	FUNCTION	FEATURES	PACKAGE
LS 188	Microphone preamplifier	Designed for use with a magnetic or piezoceramic transducer to replace carbon microphone in conventional telephones. Pin-programmable gain.	Minidip
LS 1240	Electronic two-tone ringer	Replaces mechanical bell in telephones. Features include low current consumption, integrated rectifier bridge and low component count.	Minidip
LS 346	Polarity guard with very low voltage drop	Integrated polarity guard, designed for MF dialling telephones. Drop is typically 100 mV with 10 mA line current.	Minidip
LS 5018 LS 5060 LS 5120	Overvoltage protection circuits	Integrated transient overvoltage suppressors for crowbar applications where very large transients (lightning, induced etc) can damage sensitive components. Breakover voltage (18V, 60V or 120V) is independent of transient rise time. Other features include very high current capability and failsafe operation.	Minidip
LS 496	Quad relay driver	Contains four drivers for bipolar relays. Each driver controlled by logic inputs all four drivers controlled by common disable input. All outputs short circuit protected.	16-pin DIP

Audio Amplifiers

AUDIO AMPLIFIERS FOR CAR RADIO

TYPE	FUNCTION	FEATURES	PACKAGE
TDA 2002	8W car radio amplifier	– Very few components. – High output current (3.5A). – Low distortion. – 8V - 18V supply. – Short circuit protection. – Thermal protection. – 40V load dump protection.	Pentawatt®
TDA 2003	10W car radio amplifier		
TDA 2004	10+10W stereo amplifier for car radio	– High current capability (3.5A). – Loads down to 1.6Ω. – Low distortion/noise. – Output AC short circuit to ground. – 40V load dump protection.	Multiwatt-11®
TDA 2005	20W bridge amplifier for car radio	– High current capability (3.5A) – Low distortion/noise. – Output DC/AC short circuit to ground. – 40V load dump protection. – Protects loudspeaker in short circuits.	Multiwatt-11®

AUDIO AMPLIFIERS FOR TV/RADIO

TDA 1904	4W audio amplifier	– Output 3.5W into 4 Ω at 12V. – Supply 4V - 20V.	Powerdip 8 + 8
TDA 1905	6W audio amplifier with muting	– Output 5.5W into 4 Ω at 14V. – Supply 4V - 30V.	Findip
TDA 1908	8W audio amplifier	– Output 8W into 8 Ω at 22V. – Supply 8V to 30V.	Findip
TDA 1910	10W audio amplifier with muting	– Output 10W into 8 Ω at 24V. – Supply 8V - 30V. Designed for high quality TV sets.	Multiwatt-11®
TDA 2006	10W audio amplifier	– Output 12W into 4 Ω at 24V. – Supply 12V to 30V.	Pentawatt®
TDA 2008	12W audio amplifier	– Output 12W into 4 Ω at 24V. – Supply 10V to 28V.	Pentawatt®
TDA 2009	10+10W stereo amplifier	– Output 10 + 10W stereo into 4 Ω. – Low distortion (0.5%) and 8V - 28V supply range.	Multiwatt-11®
TDA 2822M	1 + 1W stereo amplifier	– For portable radios and cassette players. Delivers 1 + 1W stereo or 2W bridge. Supply range 1.8V-15V, low distortion and low quiescent current (6 mA).	Minidip

HiFi POWER AMPLIFIERS

TYPE	FUNCTION	FEATURES	PACKAGE
TDA 2030	HiFi Power amplifier	– Output 14W into 4 Ω at ± 14V. – Distortion 0.5% at 15 kHz and maximum supply ± 18V.	Pentawatt®
TDA 2030A	HiFi Power amplifier	– Output 18W into 4 Ω at ± 16V. – Distortion 0.5% at 15 kHz. – Maximum supply ± 22V. – Delivers 32W with two devices in bridge configuration.	Pentawatt®
TDA 2040	HiFi Power amplifier	– Output 22W into 4 Ω at ± 16V. – Distortion 0.5% at 1 kHz. – Maximum supply ± 20V.	Pentawatt®

Radio & TV Circuits

RADIO CIRCUITS

TYPE	FUNCTION	FEATURES	PACKAGE
TCA 3089	FM-IF Radio system	– High limiting sensitivity.. – High AMR. – High recovered audio. – Low distortion.	16-pin DIP
TCA 3189	FM-IF high quality radio system	– Very low distortion. – Improved S/N. – Programmable audio level.	16-pin DIP
TDA 1220L TDA 1220B TDA 7220	Low voltage AM/FM radio	– Designed for use in 3V-4.5V-6V portable radio. – High sensitivity. – Very low "tweet". – High signal handling. – Low battery drain.	16-pin DIP
TDA 2220	High quality AM/FM receiver	– Intended for car radio and portable/home radio. – Ratio or quadrature detector. – AM/FM field meter.	20-pin DIP
TEA 1330	Stereo decoder	– Requires no inductors. – Wide supply range: 3V to 14V. – Excellent channel separation. – Low distortion.	16-pin DIP

TV SOUND CHANNELS

TDA 1190Z	Complete TV sound channel	– High limiting sensitivity (40 μV). – High AM rejection. – Low distortion. – High output power (4.2W into 16 Ω at 24V). – DC volume control.	Findip
TDA 3190	Complete TV sound channel		Powerdip 12 + 2 + 2
TDA 4190	Complete TV sound channel	– DC volume and tone control. – Muting function. – Output power 4W into 16 Ω at 24V. – VCR in/out function.	Powerdip 16 + 2 + 2
TDA 8190			

TV DEFLECTION CIRCUITS

TYPE	FUNCTION	FEATURES	PACKAGE
TDA 1180P	Horizontal processor	– Includes complete horizontal processor function and protection circuits.	16-pin DIP
TDA 1170S TDA 1170N	Vertical deflection system	Incorporates: – Synch. circuit – Oscillator and ramp generator – Power amplifier. – Flyback generator. – Voltage regulator.	Findip
TDA 1670A	Vertical deflection circuit	– Direct drive of 110° colour yoke (3.5A out, f = 50 Hz). – CRT screen protection. – Flyback generator. – Precision blanking pulse generator.	Multiwatt-15®
TDA 1770A		– 2.2A out, f = 50 Hz. – Flyback generator. – Precision blanking pulse generator. – CRT screen protection.	Powerdip 16 + 2 + 2
TDA 2170	TV vertical output circuit	– High efficiency power booster. – Reference voltage. – Flyback generator.	Multiwatt-15®
TDA 2270			Powerdip 16 + 2 + 2
TDA 8170			Heptawatt™
TDA 8180	Deflection processor	– No frequency or phase adjustments. – Countdown timing logic. – Automatic 50 Hz/60 Hz.	24-pin DIP

Radio & TV Circuits

TV VIDEO CIRCUITS

TYPE	FUNCTION	FEATURES	PACKAGE
TDA 440S	TV vision IF system	– Gain controlled vision IF amplifier. – Synchronous detector. – Positive and negative outputs.	16-pin DIP
TDA 4420	TV vision IF system with AFC	– High gain – high stability.. – Low intermodulation. – Fast AGC gating. – Large AFC out swing.	18-pin DIP

OTHER TV CIRCUITS

TYPE	FUNCTION	FEATURES	PACKAGE
TDA 4431/33	TV signal identification circuit and AFC interface	– Identification of TV stations. – Digital control signal for automatic search and AFC. – Ideal for electronic program memory tuning systems.	14-pin DIP
TDA 4092	5 bit binary to 7 segment Decoder Driver	– ROM mask option. – Standard configuration 2 digit (displays 1 to 32). – 5V supply.	24-pin DIP
TDA 2320	Infrared Receiver for Remote Control	– $V_S = 5V$. – Suitable for flash and carrier transmissions.	Minidip
TDA 4950	East-West correction	– Field correction in East-West direction. – Simple alignment. – Low dissipation.	Minidip

Tape Recorder / Player Circuits

PREAMPLIFIERS

TYPE	FUNCTION	FEATURES	PACKAGE
TDA 1054M	Preamplifiers with ALC for cassette recorders	– V_S = 4V to 20V. – Large ALC range. – Good SVR. – Low distortion.	16-pin DIP
TDA 2054M			
TDA 3410	Dual low noise tape preamplifier with autoreverse	– Very low noise. – High gain. – Low distortion. – Single supply operation (8V to 30V).	16-pin DIP
TDA 3420	Dual very low noise preamplifier		
TDA 2320A	Minidip stereo preamplifier	– Intended for portable cassette players and music centers. – Single/split supply. – Wide supply range (3V to 36V). – Very low consumption (0.8 mA). – Very low distortion. – Low noise.	Minidip
TDA 2310	HiFi dual preamplifier	– High quality class A preamplifier. – High slew-rate. – Very low distortion and noise.	14-pin DIP

MOTOR SPEED REGULATORS

TCA 900 TCA 910 TDA 1151	Motor speed regulators	– Intended for use as speed regulator for small DC motors. – Excellent stability vs. temperature. – $V_{S\,max}$ = 20V. – P_{tot} = 5W.	TO-126
TDA 3450	High performance motor speed regulator	– Bridge output for current up to 1A. – Particularly suitable for autoreverse car cassette players. – Digitally selected functions (inputs microprocessor compatible). – 5V to 18V supply. – Speed control without sensor.	Powerdip 16 + 2+ 2
TDA 7270S	Multifunction system for tape players	– Motor speed regulator. – Automatic stop. – Manual stop. – Pause cassette ejection. – Radio/player automatic switching. – Supply voltage: 6V to 18V.	Powerdip 8 + 8

Voltage Regulators

STANDARD – Positive

I_o max (A)	Type	Regulated output voltage (V)													Package
			5	6	7.5	8	9	10	12	15	18	20	24		
2 (*)	L78S00CV		●		●		●	●	●	●	●		●		TO-220
	L78S00CT/T		●		●		●	●	●	●	●		●		TO-3
1.5	LM117K	1.2V ← adjustable → 37V													TO-3
	LM217K														TO-3
	LM317K														TO-3
	LM317T														TO-220
1	L7800CV		●	●		●			●	●	●	●	●		TO-220
	L7800ACV(**)		●	●		●			●	●	●	●	●		TO-220
	L7800CT/T		●	●		●			●	●	●	●	●		TO-3
0.5	L78M00CV		●	●		●			●	●	●	●	●		TO-220
	L78M00CX		●	●		●			●	●	●	●	●		SOT-82
0.15	L123CB	2V ← adjustable → 36V													DIP-14
	L123CTB														TO-100
	L123TB														TO-100
	LM723CB														TO-100
	LM723CTB														TO-100
	LM723TB														TO-100
	L146CB	2V ← adjustable → 77V													DIP-14
	L146CTB														TO-100
	L146TB														TO-100

STANDARD – Negative

I_o max (A)	Type	Regulated output voltage (V)									Package
			-5	-5.2	-8	-12	-15	-18	-20	-24		
1	L7900ACV(**)		●	●	●	●	●	●	●	●		TO-220
	L7900CV		●	●	●	●	●	●	●	●		TO-220
	L7900CT/T		●	●	●	●	●	●	●	●		TO-3

(*) Proprietary SGS selection.

(**) Output voltage = ± 2%.

Voltage Regulators

LOW DROP

Type	Low drop	Very low drop	Transient protection				Reset	Short circuit protection	Reverse voltage protection	Output voltage		
			±100	± 80	± 60	± 40				5V	8.5V	10V
L387		●					●	●	●	●		
L487		●		●			●	●	●	●		
L2605	●		●					●	●	●		
L2685	●		●					●	●		●	
L2610	●		●					●	●			●
L4705		●		●				●	●	●		
L4785		●		●				●	●		●	
L4710		●		●				●	●			●
L4805		●			●			●	●	●		
L4885		●			●			●	●		●	
L4810		●			●			●	●			●
LM2930A		●				●		●	●	●		
LM2931A		●			●			●	●	●		

PROPRIETARY

<table>
<tr><th rowspan="2">I_o max (A)</th><th rowspan="2">Type</th><th colspan="5">Regulated output voltage (V)</th><th rowspan="2">Package</th></tr>
<tr><th></th><th>5</th><th>8.5</th><th>10</th><th></th></tr>
<tr><td>4</td><td>L296 (*)</td><td colspan="5">5.1V ← adjustable → 40V</td><td>Multiwatt 15®</td></tr>
<tr><td>2</td><td>L200CH/CV
L200CT/T</td><td colspan="5">2.9V ← adjustable → 36V</td><td>Pentawatt®
TO-3(4 lead)</td></tr>
<tr><td rowspan="5">0.5</td><td>L387</td><td></td><td>●</td><td></td><td></td><td></td><td>Pentawatt®</td></tr>
<tr><td>L487</td><td></td><td>●</td><td></td><td></td><td></td><td>Pentawatt®</td></tr>
<tr><td>L2600V</td><td></td><td>●</td><td>●</td><td>●</td><td></td><td>TO-220</td></tr>
<tr><td>L4700CV</td><td></td><td>●</td><td>●</td><td>●</td><td></td><td>TO-220</td></tr>
<tr><td>L4800CV</td><td></td><td>●</td><td>●</td><td>●</td><td></td><td>TO-220</td></tr>
<tr><td rowspan="2">0.4</td><td>LM2930A</td><td></td><td>●</td><td></td><td></td><td></td><td>TO-220</td></tr>
<tr><td>LM2931A</td><td></td><td>●</td><td></td><td></td><td></td><td>TO-220</td></tr>
</table>

(*) Switch mode power supply.

Operational Amplifiers

DUAL

Type	Temperature Range (°C)	Frequency compensat.	CMR (dB)	Input Bias Curr. (nA)	Slew Rate (V/μs)	Max supply Voltage (V)	Package
LM358N	0 to 70	●	70	45	–	32	Minidip
LM358AN	0 to 70	●	85	45	–	32	
LM2904N	-40 to 85	●	70	45	–	26	
LS204CB	0 to 70	●	95	80	1	± 18	
LS4558NB	0 to 70	●	90	50	1.5	± 18	
MC1458P1	0 to 70	●	90	80	0.5	± 18	
MC1458CP1	0 to 70	●	90	80	0.5	± 18	
TDA2320	0 to 70	●	–	100	1.5	20	
TDA2320A	0 to 70	●	–	150	1.6	36	
LS204TB	-25 to 85	●	100	50	1.5	± 18	TO-99
LS204ATB	-55 to 125	●	100	50	1.5	± 18	
LS204CTB	0 to 70	●	95	80	1	± 18	
LM358CM	0 to 70	●	70	45	–	32	SO-8
LM2904CM	-40 to 85	●	70	45	–	26	
LS204M	-25 to 85	●	100	50	1.5	± 18	
LS204CM	0 to 70	●	95	80	1	± 18	
LS4558NM	0 to 70	●	90	50	1.5	± 18	
MC1458M	0 to 70	●	90	80	0.5	± 18	
MC1458CM	0 to 70	●	90	80	0.5	± 18	

QUAD

Type	Temperature Range (°C)	Frequency compensat.	CMR (dB)	Input Bias Curr. (nA)	Slew Rate (V/μs)	Max supply Voltage (V)	Package
LM324N	0 to 70	●	70	45	–	32	DIP-14
LM324AN	0 to 70	●	85	45	–	32	
LM2902N	-40 to 85	●	70	45	–	26	
LS404CB	0 to 70	●	90	100	1	± 18	
LM324CM	0 to 70	●	70	45	–	32	SO-14
LM2902CM	-40 to 85	●	70	45	–	26	
LS404M	0 to 70	●	94	50	1.5	± 18	
LS404CM	0 to 70	●	90	100	1	± 18	

Operational Amplifiers

SINGLE

Type	Temperature Range (°C)	Frequency compensat.	CMR (dB)	Input Bias Curr. (nA)	Slew Rate (V/μs)	Max supply Voltage (V)	Package
LM741TB	-55 to 125	●	90	80	0.5	± 22	TO-99
LM741ATB	-55 to 125	●	95	30	0.7	± 22	
LM741CTB	0 to 70	●	90	80	0.5	± 18	
LM748TB	-55 to 125		90	80	5.5	± 22	
LM748ATB	-55 to 125		95	20	5.5	± 22	
LM748CTB	0 to 70		90	80	5.5	± 22	
LS101TB	-55 to 125		90	120	10	± 22	
LS101ATB	-55 ro 125		96	30	10	± 22	
LS107TB	-55 to 125	●	96	30	0.7	± 22	
LS141TB	-55 to 125	●	90	80	0.5	± 22	
LS141ATB	-55 to 125	●	95	30	0.7	± 22	
LS141CTB	0 to 70	●	90	80	0.5	± 18	
LS148TB	-55 to 125		90	80	5.5	± 22	
LS148ATB	-55 to 125		95	20	5.5	± 22	
LS148CTB	0 to 70		90	80	5.5	± 22	
LS201TB	0 to 70		90	250	10	± 22	
LS201ATB	-25 to 85		96	30	10	± 22	
LS207TB	-25 to 85	●	96	30	0.7	± 22	
LS301ATB	0 to 70		90	70	10	± 18	
LS307TB	0 to 70	●	90	70	0.5	± 18	
LS709TB	-55 to 125		90	200	0.25	± 18	
LS709ATB	-55 to 125		110	100	0.25	± 18	
LS709CTB	0 to 70		90	300	0.25	± 18	
LS776TB	-55 to 125	●	90	15	0.35	± 18	
LS776CTB	0 to 70	●	90	15	0.8	± 18	
LM741CB	0 to 70	●	90	80	0.5	± 18	Minidip
LM748CB	0 to 70		90	80	5.5	± 22	
LS141CM	0 to 70	●	90	80	0.5	± 18	
LS148CB	0 to 70		90	80	5.5	± 22	
LS201B	0 to 70		90	250	10	± 22	
LS301AB	0 to 70		90	70	10	± 18	
LS307B	0 to 70	●	90	70	0.5	± 18	
LS776CB	0 to 70	●	90	15	0.8	± 18	
LS141CM	0 to 70	●	90	80	0.5	± 18	SO-8
LS148CM	0 to 70		90	80	5.5	± 22	
LS201M	0 to 70		90	250	10	± 22	
LS301AM	0 to 70		90	70	10	± 18	
LS307M	0 to 70	●	90	70	0.5	± 18	
LS776CM	0 to 70	●	90	15	0.8	± 18	
LS709CB	0 to 70		90	300	0.25	± 18	DIP-14

Comparators

DUAL

Type	Temperature Range (°C)	Offset Voltage (mV)	Input bias Current (nA)	Voltage Gain (dB)	Supply Current (mA)	Max supply Voltage (V)	Package
LM393N	0 to 70	2	25	106	0.4	36	Minidip
LM393AN	0 to 70	1	25	106	0.4	36	
LM2903N	-40 to 85	2	25	106	0.4	36	
LM393CM	0 to 70	2	25	106	0.4	36	SO-8
LM2903CM	-40 to 85	2	25	106	0.4	36	

QUAD

Type	Temperature Range (°C)	Offset Voltage (mV)	Input bias Current (nA)	Voltage Gain (dB)	Supply Current (mA)	Max. supply Voltage (V)	Package
LM339N	0 to 70	2	25	106	0.8	36	DIP-14
LM339AN	0 to 70	1	25	106	0.8	36	
LM2901N	-40 to 85	2	25	106	0.8	36	
MC3302P	-40 to 85	3	30	90	0.8	28	
LM339CM	0 to 70	2	25	106	0.8	36	SO-14
LM2901CM	-40 to 85	2	25	106	0.8	36	

Custom Circuits

FULL CUSTOM

SGS designs and produces custom bipolar ICs for a large number of leading manufacturers. Specialising in advanced technologies and packages for demanding applications, SGS is particularly strong in the industrial, automotive and telecommunications sectors.

A wide range of technologies is available for custom circuits, including low voltage, low noise, high voltage, high current and mixed analog/digital processes. SGS also offers packages of almost every type, ranging from the 8-pin small outline micropackage to the 15-lead Multiwatt plastic power package.

If you are interested in discussing custom chip designs contact your nearest sales office for more information.

ZODIAC CELL LIBRARY

Zodiac is a library cell system which allows customers with no specific knowledge of IC technology to design their own mixed analog/digital signal processing circuits. The library consists of 17 analog blocks, 16 I^2L logic blocks and an ECL prescaler. Individual transistors, diodes, capacitors and resistors can also be integrated.

The customer designs and evaluates the proposed design with the help of a series of development parts, each containing one or more of the library cells. When the breadboard functions correctly SGS takes the final drawings and lays out the appropriate cells in the smallest possible silicon area.

Zodiac is almost as fast as pre-diffused arrays but uses the silicon area more effectively. Zodiac chips are therefore cheap to develop and cheap to produce.

PACKAGES

Packages

14-LEAD PLASTIC DIP (KOVAR frame)

R_{th} = 200°C/W

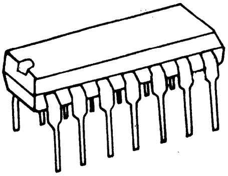

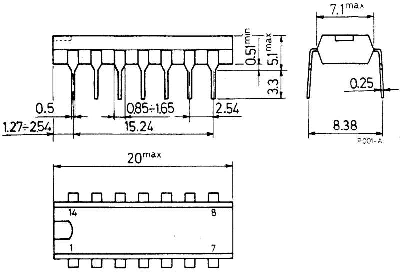

16-LEAD PLASTIC DIP (KOVAR frame)

R_{th} = 200°C/W

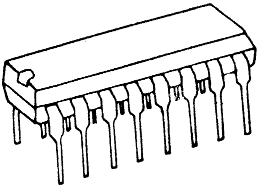

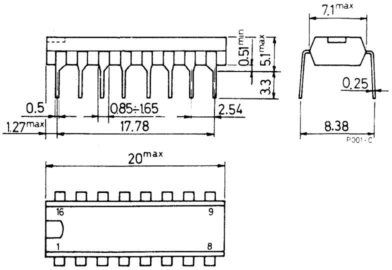

16-LEAD PLASTIC DIP

R_{th} = 80°C/W

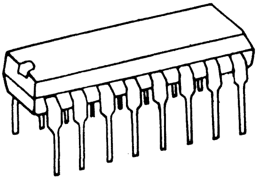

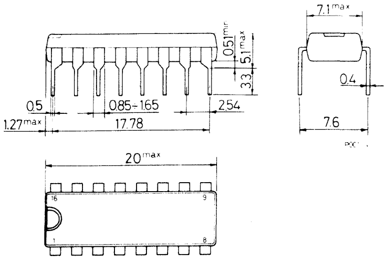

FIN DIP

$R_{th\ j\text{-}tab} = 12°C/W$
$R_{th\ j\text{-}amb} = 70°C/W$

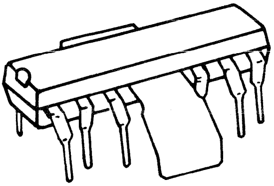

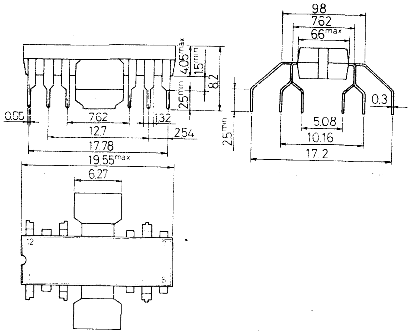

$R_{th\ j\text{-}tab} = 10°C/W$
$R_{th\ j\text{-}amb} = 80°C/W$

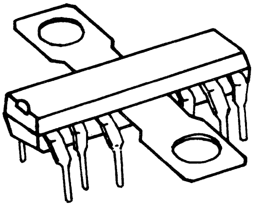

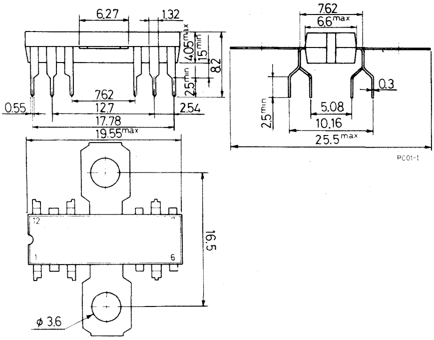

16-LEAD PLASTIC DIP with slug (KOVAR frame)

$R_{th\ j\text{-}case} = 3°C/W$

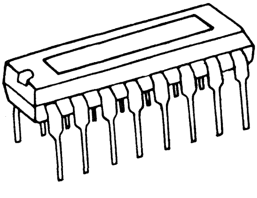

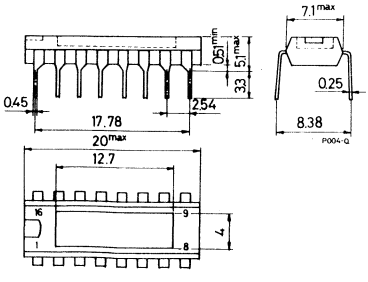

Die mounted on underside of copper slug.

Packages

8 + 8 LEAD POWERDIP

$R_{th\ j\text{-}pins} = 15°C/W$

$R_{th\ j\text{-}amb} = 70°C/W$

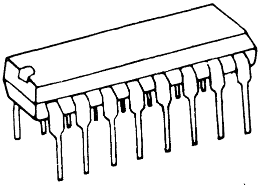

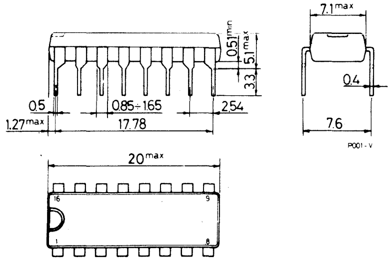

Pins 9 to 16–connected to substrate and used for heatsinking.

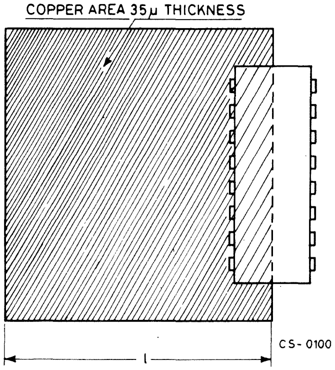

Using PC board copper as heatsink.

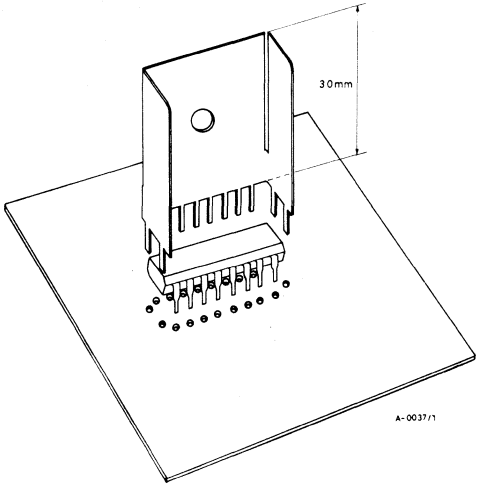

Addition of an external heatsink.

18-LEAD PLASTIC DIP

$R_{th} = 80°C/W$

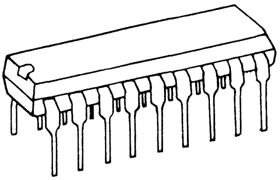

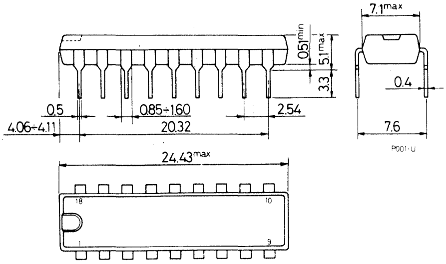

12 + 2 + 2 LEAD PLASTIC DIP

$R_{th\ j\text{-}pins} = 14°C/W$
$R_{th\ j\text{-}amb} = 80°C/W$

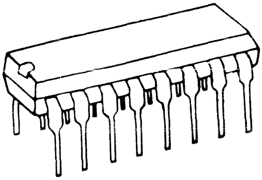

Four center pins connected to the substrate and used for heatsinking.

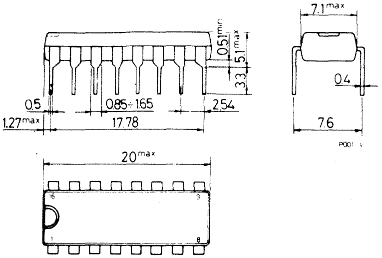

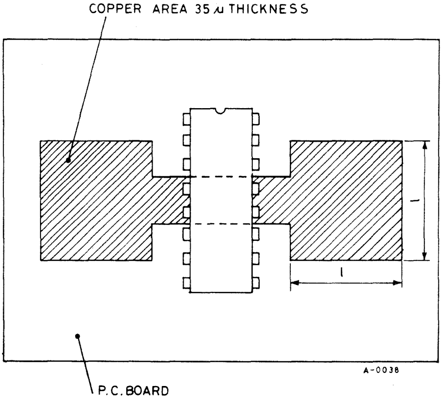

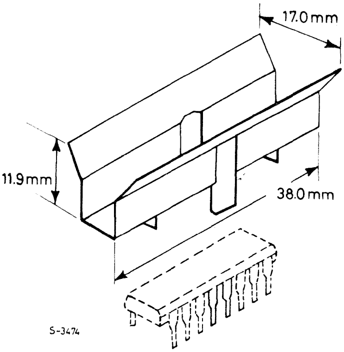

20-LEAD PLASTIC DIP

$R_{th\ j\text{-}amb} = 80°C/W$

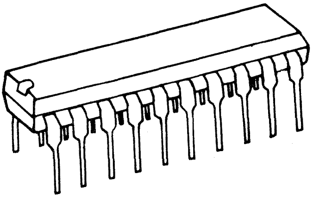

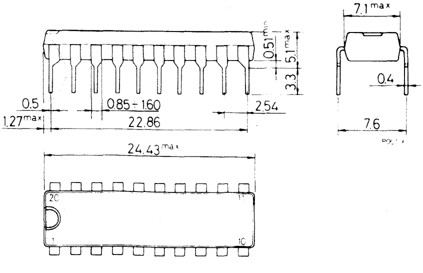

Packages

16 + 2 + 2 LEAD PLASTIC DIP

$R_{th\ j\text{-}pins} = 14°C/W$
$R_{th\ j\text{-}amb} = 80°C/W$

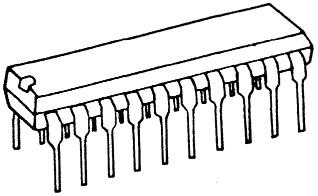

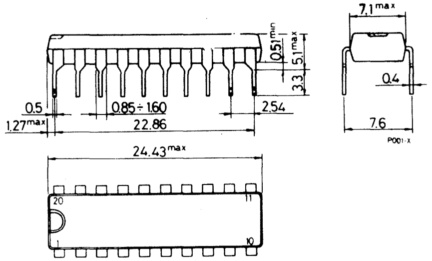

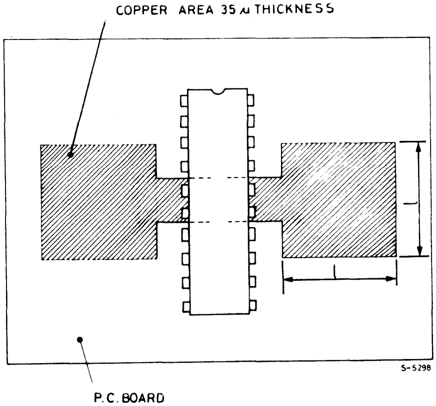

Thermal resistance of the P.C. copper side vs. side "ℓ"

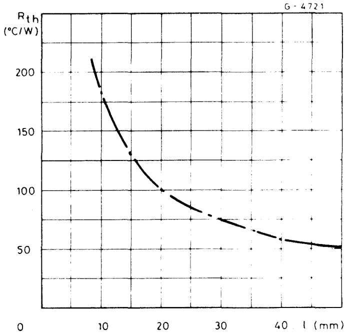

8-LEAD MINIDIP

$R_{th} = 100°C/W$

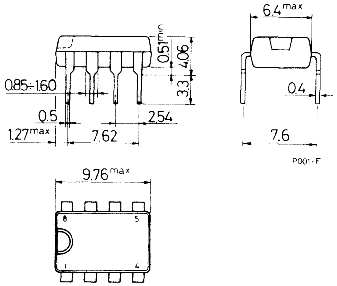

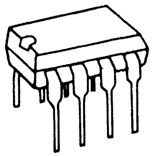

Packages

TO-99 (8 PIN)

$R_{th} = 155°C/W$

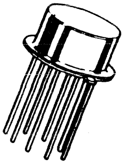

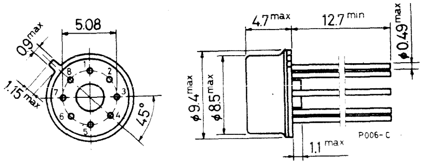

TO-100 (10 PIN)

$R_{th} = 155°C/W$

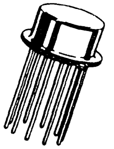

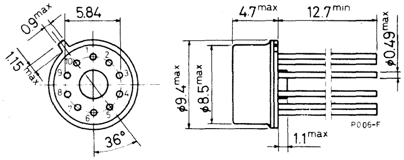

SO-8 – MICROPACKAGE

$R_{th} = 200°C/W$

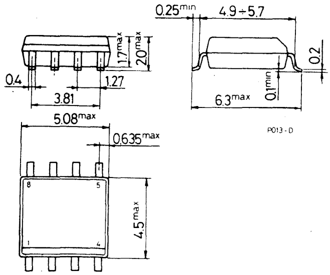

Packages

SO-14 – MICROPACKAGE

R_{th} = 200°C/W

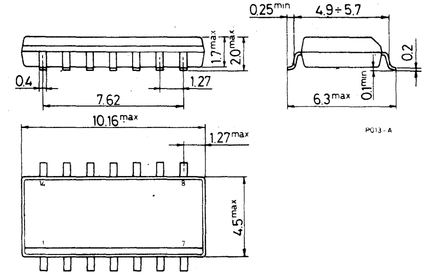

SO-16 – MICROPACKAGE

R_{th} = 200°C/W

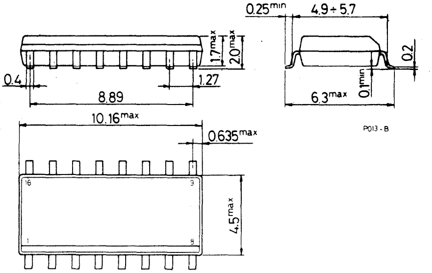

MICROWATT™

R_{th} = 50°C/W

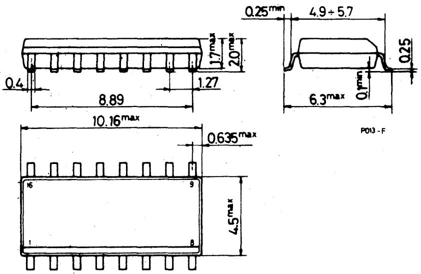

Packages

TO-126 (SOT. 32)

$R_{th} = 10°C/W$

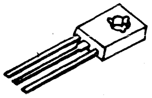

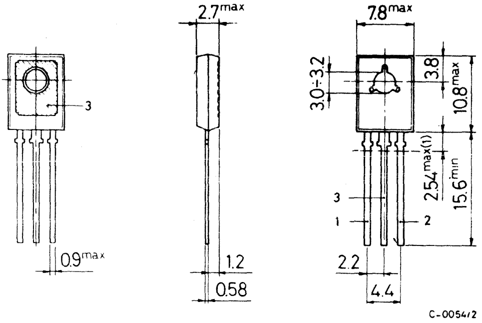

TO-220 (VERSAWATT)

$R_{th} = 3°C/W$

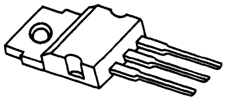

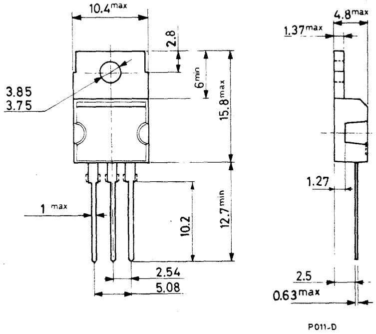

PENTAWATT®

$R_{th} = 3°C/W$

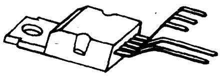

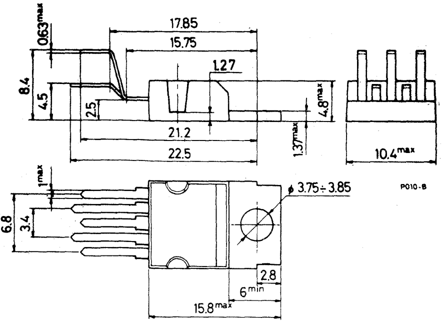

Packages

MULTIWATT - 11®

$R_{th} = 3°C/W$

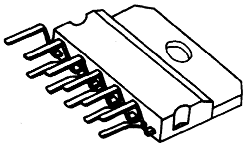

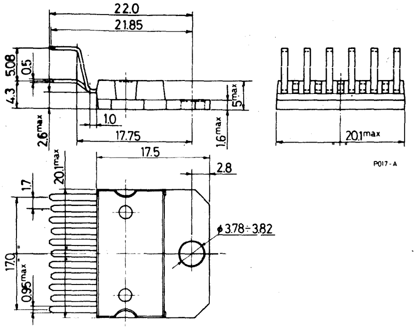

MULTIWATT - 15®

$R_{th} = 3°C/W$

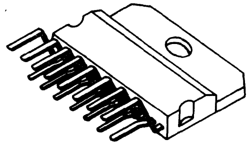

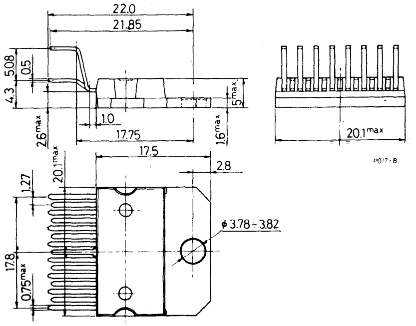

TO-3

$R_{th} = 4°C/W$

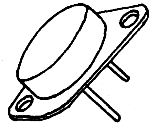

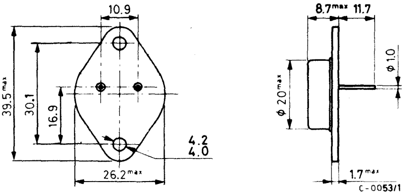

TO-3 (4 lead)

R_{th} = 4°C/W

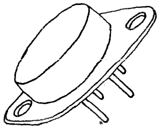

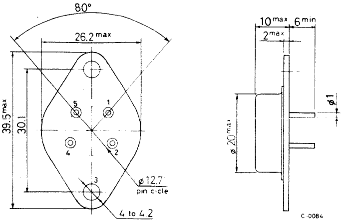

HEPTAWATT™

R_{th} = 3°C/W

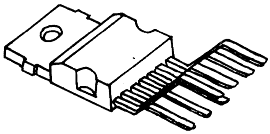

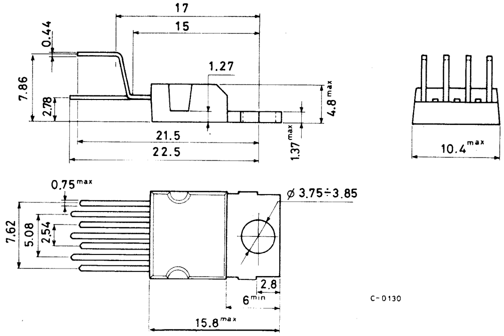

SOT-82

R_{th} = 8°C/W

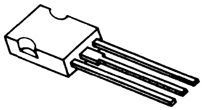

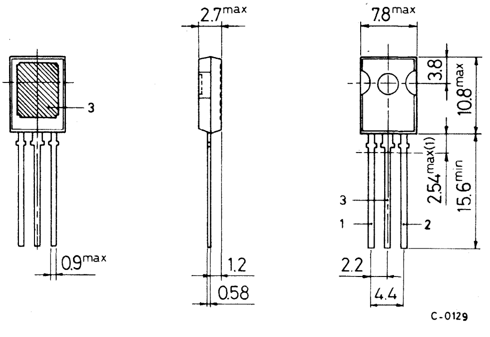

SGS-ATES GROUP OF COMPANIES
Italy - France - Malta - Malaysia - Singapore - Sweden - Switzerland - United Kingdom - U.S.A. - West Germany

---

Garzanti s.p.a. – Cernusco s./N.